Text File

Introduced: 2/21/2025 **Bill No:** 2025-1545, **Version:** 2

Committee: Commission - Planning Commission **Status:** Reported from Standing Committee

Ordinance amending the Pittsburgh Code, Title Nine - Zoning, Article I, Introduction and Establishment, Chapter 902 Zoning Districts in General, to add Inclusionary Zoning and Zoning; Article III, Overlay Zoning Districts, to add a sunset clause to 907.04.A IZ-O, Inclusionary Housing Overlay District; Article IV, Development Standards, to amend 915.07, Performance Points System; Article II, Base Zoning, Chapter 905 Special Purpose Districts; Article IV, Planning Districts; Chapter 908 Public Realm Districts; Chapter 909 Planned Development Districts; Article V, Use Regulations; Chapter 911 Primary Uses; Chapter 912 Accessory Uses and Structures; Chapter 913 Use Exceptions and Conditions Not Listed in Use Table; Article VI, Development Standards; Chapter 914 Parking Loading and Access; Chapter 916 Residential Compatibility Standards; Article VIII, Review and Enforcement; Chapter 922 Development Review Procedures. to remove minimum off-street parking from the Zoning Code; Article V Use Regulations; Chapter 912 Accessory Uses and Structures; Article IX Measurements and Definitions; Chapter 925, Measurements; and Chapter 926, Definitions.
(Public Hearing held 9/10/25)
(Sent to the Planning Commission for a Report & Recommendation on 10/15/25)

The Council of the City of Pittsburgh hereby enacts as follows:

Section 1. The Pittsburgh Code, Title Nine, Zoning Code, Article I, Introduction and Establishment, is hereby amended at Chapter 902 as follows:

SEE ATTACHMENT

902.04 Affordable Housing Bonus Program

902.04.A.1 Need for Affordable Housing Bonus Program

The Affordable Housing Bonus Program is necessary to incentivize the private market's contribution to the City's affordable housing stock. Implementation of the Program will help the City meet existing and anticipated housing and employment needs and to provide a diverse range of housing choices within the City. The Bonus Program will provide adequate balances by ensuring that the neighborhoods can continue to offer new housing units at a variety of price points without depressing market-rate housing construction activity.

902.04.A.2 Purpose and Intent

The intent of the Affordable Housing Bonus Program is to maximize the production of affordable housing for a range of family sizes and promoting economic integration throughout the City. The construction of new housing is extremely cost-intensive, and affordability requirements, by definition, restrict the amount of revenue a project can generate. This can create substantial financing gaps and ultimately discourage many projects from being constructed. As many American cities have experienced, well-intentioned affordability mandates can depress the overall production of housing, contributing to supply deficits and rising rents for tenants of all income levels as well as lost wages for workers in the building trades and beyond. If the City desires for private market actors to contribute substantially to the production of units for Pittsburghers earning less than half of the Area Median Income, it is therefore essential that the City provide adequate incentives to accelerate housing initiatives for residents of low and moderate-income incomes.

The Affordable Housing Bonus Program encourages quality, economically-balanced development by:

Offering substantial incentives for private housing developers to produce affordable housing alongside the current market production of housing units, including property tax abatements, density bonuses, expedited approval timelines, and other benefits for developments meeting the Affordable Housing Bonus requirements;

Encouraging diverse and balanced housing available for households of all income levels and ensuring that when developing the limited supply of developable land, housing opportunities for persons of variety of income levels are provided;

Establishing an Affordable Housing Payments Fund that will offer development projects the option to contribute meaningfully to affordability initiatives in exchange for the bonuses offered by the Program.

902.04.A.3 Definitions

Administrative Agent means with respect to Affordable Rental Housing, a person or entity such as the Housing Authority of the City of Pittsburgh, as determined by the Director of City Planning, or their designee, that enters into an agreement with the City to monitor and enforce compliance with the requirements of this Section and its regulations. With respect to Affordable Owner-Occupied Housing, the Administrative Agent will enter into an agreement with the City to monitor and enforce compliance with the requirements of this Section and its regulations.

Affordable Housing Provider means a person or entity such as the Housing Authority of the City of Pittsburgh or such other approved owner/manager of affordable housing, as approved by the Director of City Planning, or their designee, that enters into an agreement with the City to lease Affordable Rental Units exclusively to Eligible Households in compliance with this Section and its regulations.

Affordable Owner-Occupied Unit means an Affordable Unit that is both owned and occupied by one (1) or more persons as a primary residence. The term does not include a unit that is occupied pursuant to a lease-purchase agreement or contract of sale.

Affordable Rental Unit means an Affordable Unit other than an Affordable Owner-Occupied Unit.

Affordable Unit means a Dwelling Unit that satisfies the Affordability Standards set forth in 902.04.A.5 and 902.04.A.6,

Affordability Term means a minimum of twenty (20) years from the date of initial occupancy of an Affordable Unit.

Allowable Pricing means with respect to Affordable Rental Units, the monthly rent paid by the Eligible Household, plus all mandatory or essential fees and charges and an approved Utility Allowance, shall not exceed thirty (30) percent of the monthly income of a household earning fifty (50) percent of AMI with a household size one-and-a-half (1.5) times the bedroom count of the Dwelling Unit, except under conditions governed by Section 902.04.A.5 (On-Site Affordability Standards). Only tenant-paid costs are subject to the Allowable Pricing. If a rental subsidy is provided, the total of all monthly rent, fees, charges and approved Utility Allowance may exceed the Allowable Pricing so long as the portion paid by the household does not. With respect to Affordable Owner-Occupied Units, the initial sale price shall be set a level that ensures that a household earning seventy (70) percent of AMI for a household size one-and-a-half (1.5) times the bedroom count of the Dwelling Unit will spend no more than twenty-eight (28) percent of gross monthly income on their mortgage payment (principal and interest); taxes and insurance; and all mandatory or essential fees and charges (including condo/HOA dues), assuming a five-percent down payment and a thirty (30)-year fixed rate mortgage at the then current mortgage rate (determined by the Federal Reserve's 30-Year Fixed Rate Mortgage Average in the United States). For resale price, an increase in price of 2 percent per year is permitted. It is calculated from the date of purchase to the date of Owner's notice of intent to sell (compounded annually and prorated at the rate of .25 percent per each whole month of any part of a year).

Area Median Income (AMI) means the median household income for the Pittsburgh metropolitan area published annually by the U.S. Department of Housing and Urban Development ("HUD").

Community Land Trust means a non-profit entity whose primary mission to create or preserve permanently affordable housing, and approved by the Director of City Planning, and that enters into an agreement with the City to convey Affordable Owner-Occupied Units exclusively to Eligible Households for owner occupancy subject to a ground lease that requires compliance with this Section and implementing regulations.

Development Project means one (1) or more Developments (as defined in Title IX, Ch. 926.67) that meet the Applicability Requirements of Section 902.04.A.4.

Eligible Household means with respect to Affordable Rental Units, a household that earns no

more than fifty (50) percent of AMI. With respect to Affordable Owner-Occupied Units, a household that earns no more than eighty (80) percent of AMI.

Family-Sized Units means dwelling units that contain a minimum of two (2) bedrooms.

Market-Rate Unit means a Dwelling Unit in a Development Project that does not satisfy the Affordability Standards set forth in Section 902.04.A.7.

Networked Walkshed means the land area within a defined walking range, traversable on established streets or pathways.

Off-Site Units means Affordable units constructed within one-half (1/2) mile of the subject site, but not on a parcel adjacent to the subject site.

Substantial Improvement means any reconstruction, rehabilitation, addition, or other improvement of a structure, of which the cost equals or exceeds one hundred (100) percent of the market value of the structure before the start of construction of the improvement, that occurs within a five (5)-year period. This term includes structures which have incurred substantial damage regardless of the actual repair worked performed. The term does not, however include any project for improvement of a structure to correct existing violations of state or local health, sanitary, or safety code specifications which have been identified by the local code enforcement official and which are the minimum necessary to assure safe living conditions.

Utility Allowance means an allowance for tenant-paid utilities, updated annually and approved by the Director of City Planning or their designee. The term shall include the applicable utility allowance published annually by the Housing Authority of the City of Pittsburgh or a utility allowance prepared by the Owner using methodology approved by the Pennsylvania Housing Finance Agency. In either case, the Utility Allowance must be appropriate for the size and type of dwelling unit and the kind of heat and appliances used, and must be approved by the Administrative Agent.

902.04.A.5 Applicability

This Section applies to all areas and districts, except the following exempted areas and development:

All of the area zoned IZ-O.

The following applications are eligible to seek the Affordable Housing Bonuses provided for in 902.04.A.9, if they choose to comply with the Affordability Standards:

New construction or Substantial Improvement, of one (1) or more buildings that collectively contain twenty (20) or more dwelling units either (i) on one

or more zoning lots marketed as a single or unified project, (ii) sharing common elements or common financing, or (iii) comprising a part of a planned development.

New construction or Substantial Improvement of one (1) or more buildings that collectively contain twenty (20) or more sleeping rooms either: (i) within a Multi-Suite Residential use, (ii) one (1) or more zoning lots marketed as a single or unified project, (iii) sharing common elements or common financing, or (iv) comprising a part of a planned development. Dormitory and Fraternity/Sorority Uses shall be exempt from this provision.

New construction or Substantial Improvement of one (1) or more buildings that collectively contain any combination of twenty (20) or more dwelling units and sleeping rooms either: (i) within a Multi- Suite Residential use, (ii) on one (1) or more zoning lots marketed as a single or unified project, (iii) sharing common elements or common financing, or (iv) comprising a part of a planned development. Dormitory and Fraternity/Sorority Uses shall be exempt from this provision.

The standards of the Affordable Housing Bonus Program shall not be construed as reducing, conflicting with, or superseding any affordability incentives, goals, or requirements included elsewhere within the Zoning Code, or in any plans or policy documents adopted by the City.

If a Development Project seeks the bonus afforded by Section 902.04.A.9 and Chapter 265, §265.03 and §265.06(c)(3), a minimum of ten (10) percent of units shall be Affordable Units. When this yields a fraction, the number of units shall be rounded up to the nearest whole units. If a Development Project within opts to forego the bonuses afforded by Section 902.04.A.9 and Chapter 265, §265.03 and §265.06 (c)(3), it is not required to contain Affordable Units.

Development applications for a project containing twenty (20) or more residential units that meet the following qualifications shall be exempt from the qualifications of this section, but are permitted to avail of the development bonuses of Section 902.04.A.9.

The units are subject to a housing assistance payments contract under Section 8 of the United States Housing Act of 1937, as amended;

The units are rent-restricted and income-restricted units of a qualified low- income housing project receiving tax credits under section 42(g) of the Internal Revenue Code; or

The units are subject to rent and income restrictions under the terms of financial assistance provided to the rental housing property by the federal government or the state of Pennsylvania, or a local unit of government, as evidenced by a document recorded against the property.

902.04.A.5 On-Site Affordability Standards

To qualify for initial occupancy in an Affordable Unit, a household must be an Eligible Household. With respect to an Affordable Rental Unit, the Eligible Household must provide annual documentation of income and household composition to the Administrative Agent. In the event that household income exceeds ninety-nine (99) percent of AMI, the household must vacate the unit by the later of either (i) the expiration of the next scheduled lease renewal or (ii) sixty (60) days after the household income exceeds ninety-nine (99) percent of AMI. In the event that household income reaches eighty (80) percent of AMI, the Allowable Pricing for the monthly rent paid by the Eligible Household, plus all mandatory or essential fees and charges and an approved Utility Allowance, shall not exceed thirty (30) percent of the monthly income of a household earning eighty (80) percent of AMI with a household size one-and-a-half (1.5) times the bedroom count of the Dwelling Unit.

With respect to an Affordable Owner-Occupied Unit, the Eligible Household must continue to reside in the unit in the household's primary residence.

Prior to the issuance of a Certificate of Occupancy for an Affordable Rental Unit, the Applicant shall either:

Record a deed restriction allowing the City and Eligible Households to enforce these on-site affordability standards and related City regulations, such restriction to be prepared by the Director of City Planning or their designee, or

Enter into a master lease of the unit with an Affordable Housing Provider for the entire Affordability Term.

Prior to the issuance of a Certificate of Occupancy for an Affordable Owner- Occupied Unit, the Applicant shall either:

Record a deed restriction allowing the City and Eligible Households to enforce these on-site affordability standards and related City regulations, such to be prepared by Director of City Planning or their designee, obliging owner-occupancy of the unit and restricting additional debt that can be secured against the property, or

Sell the unit to a Community Land Trust.

Affordable Units must satisfy the Allowable Pricing criteria set forth in Section 902.04.A.3.

Either a minimum of ten (10) percent of units shall be Affordable Units or an equal or greater number of bedrooms provided in Affordable Family-Sized Units. For the bedroom calculation, a studio shall be considered a one (1) bedroom unit. When the number of Affordable Units yields a fraction, the number of units shall be rounded up to the nearest whole units.

Rental Affordable Units will remain affordable for not less than twenty (20) years.

Owner-Occupied Affordable Units shall comply with the Allowable Pricing requirements for resale price.

Affordable Units must be integrated within, and distributed throughout, each building, except for:

Affordable Units are not required to be placed on the top floor in buildings of less than six (6) stories.

In buildings of six (6) stories or more, Affordable Units are not required to be placed on the top three (3) floors.

Except as provided in Section 902.04.A.4(j), on-site Affordable Units shall be equivalent to market-rate units within the building in all ways, including appliances, finishes, and square footage.

(j) Core building and Development Project amenities, such as a gym, pool or parking space, must be shared with no additional charges or restrictions to residents in Affordable Units unless those charges are subtracted from rent or HOA dues for all residents regardless of unit or rental price.

The percentage of Affordable Units that are also Family-sized Units shall be equal or greater to the percentage of Market-Rate Units that are also Family-sized Units.

For phased developments, for every ten (10) units constructed, a minimum of one (1) unit shall be an Affordable Unit.

Effective Date of 902.04.A.5.

The standards of this Section (902.04.A.5) shall become effective on April 1, 2026.

902.04.A.6 Off-Site Affordability Standards New Construction

Affordable units constructed off-site may be permitted by right, subject to the following standards:

(a) Off-site Units shall be subject to the standards of Section 902.04.A.5 except for Section 902.04.A.5 (e).

(b) A minimum of twelve (12) percent of the subject application's number of units shall be Affordable Units. When this yields a fraction, the number of units shall be rounded up to the nearest whole number.

(c) The applicant shall identify an alternative site suitable for residential housing which the applicant owns, has site control (e.g., purchase agreement, option to purchase, lease), or is otherwise available for

the development of Affordable Units pursuant to an agreement between the applicant and a developer who owns the site or has site control. Developments providing rental units may provide Owner-Occupied off-site units.

With respect to Rental Affordable Units, the Applicant must either:

Own a controlling interest in the off-site development; or

Provide evidence of an enforceable commitment to contribute three hundred thousand dollars ($300,000.00) or greater per Affordable Unit to the off-site development through an agreement with a developer who owns the site or has site control .Every July 1, or the following business day, if applicable, the City will adjust the fee per off-site unit for inflation using the United States Federal Reserve's Final Demand Construction Index (PPIDCS). If this index ceases to exist, the Zoning Administrator shall substitute another construction cost index which is as nearly equivalent to the original index as possible.

With respect to Owner-Occupied Affordable Units, the Applicant must either:

Own the land and develop the off-site housing, or

Provide evidence of an enforceable commitment to contribute

$300,000.00 or greater per Affordable Unit to the off-site development through an agreement with a developer who owns the site or has site control. Every July 1, or the following business day, if applicable, the City will adjust the fee per off-site unit for inflation using the United States Federal Reserve's Final Demand Construction Index (PPIDCS) If this index ceases to exist, the Zoning Administrator shall substitute another construction cost index which is as nearly equivalent to the original index as possible.

(d) The Certificate of Occupancy for off-site Affordable Units must be obtained prior to the issuance of the final Certificate of Occupancy for the subject property.

(e) The off-site units shall be located no more than one-half (1/2) mile of the subject site, within City limits.

(f) The applicant must submit analysis to establish that the off-site property has comparable or better public transit service as the subject site, evaluated by distance from transit stop(s) via Networked Walkshed, number of routes available, and frequency of service.

(g) Effective Date of 902.04.A.6

The standards of this Section (902.04.A.6) shall become effective on April 1, 2026.

902.04.A.7 Off-Site Affordable Units Existing Construction

Affordable units off-site that are not new construction may be permitted as a Special Exception per 922.07, subject to the following standards:

A minimum of twelve (12) percent of the subject application's number of units shall be Affordable Units. When this yields a fraction, the number of units shall be rounded up to the nearest whole number.

The applicant shall identify residential units which the applicant owns, has site control (e.g., purchase agreement, option to purchase, lease), or is otherwise available for Affordable Units pursuant to an agreement between the applicant and a developer who owns the site or has site control. Developments providing rental units may provide Owner-Occupied off-site units.

The applicant shall provide to the Zoning Board of Adjustment documentation that the units are currently high-quality residential units or a plan for renovation to provide units that are equal or better than market-rate units. Features of high-quality residential units include, but are not limited to, modern appliances and fixtures; energy efficient windows and doors; sound proofing; building amenities; and modern security features.

Residential Units are encouraged to provide more family-sized units.

The Certificate of Occupancy for off-site Affordable Units must be obtained prior to the issuance of the final Certificate of Occupancy for the subject property.

(f) The off-site units shall be located no more than one-half (1/2) mile of the subject site, within City limits.

(g) The applicant must submit analysis to establish that the off-site property has comparable or better public transit service as the subject site, evaluated by distance from transit stop(s) via Networked Walkshed, number of routes available, and frequency of service.

(h) Effective Date of 902.04.A.7

1. The standards of this Section (902.04.A.7) shall become effective on April 1, 2026.

902.04.A.8 Compliance through Payment in Lieu

In lieu of providing Affordable Units in accordance with this Section, payment into the Affordable Housing Payments Fund at a rate of $25 per square foot of residential Gross Floor Area. In mixed-use

structures, commercial square footage is excluded from this calculation. Payment is due prior to initial occupancy of any residential structure or residential portion of the structure. Every July 1, or the following business day, if applicable, the City will adjust the per square foot fee for inflation using the United States Federal Reserve's Final Demand Construction Index (PPIDCS). If this index ceases to exist, the Zoning Administrator shall substitute another construction cost index which is as nearly equivalent to the original index as possible. Compliance through Payment in Lieu is subject to the following standards:

Effective Date of 902.04.A.8

The standards of this Section (902.04.A.8) shall become effective on April 1, 2026.

902.04.A.9 Development Bonuses

Developments meeting the Affordability Standards within this ordinance may avail of the following development bonuses:

Developments not otherwise permitted to utilize the Performance Points System in 915.07 shall be eligible for 915.07.D4.b. Each bonus point is worth 15 feet of additional height and 1 FAR. This shall supersede any applicable maximum building height requirement based on the number of stories or any applicable requirement for a Special Exception to exceed the maximum height or FAR. The height limits of the Residential Compatability Standards of 916.01.B.1 shall not apply for these developments.

Developments eligible for bonuses under per 915.07 Performance Points System are not eligible for further density incentives but shall be exempt from any applicable upper story step-back requirement below eighty-five (85) feet in building height. Structures in excess of eighty-five (85) feet in height shall provide front and street-side step-backs of ten (10) feet beginning no higher than eighty-five (85) feet.

902.04.B. Mandatory Lookback- No later than two years from the Effective Date, the Department of City Planning, in collaboration with other City Departments or Offices, shall provide the City Council with a report on the initial phase of the Affordable Housing Bonus Program, and offer recommendations for improvements as appropriate.

Section 2. The Pittsburgh Code, Title Nine, Zoning Code, Article II, Base Zoning, is hereby amended at Chapter 905 Special Purpose Districts as follows:

905.03.D.2 Applicability

An Institutional Master Plan must be submitted and approved, in accordance with the procedures of Sec. 922.12, prior to any development within an EMI District except for the following:

(a) No Institutional Master Plan shall be required for interior alterations to an existing building, provided that such project does not involve the establishment or expansion of commercial uses allowed in the EMI District.

(b) Prior to the approval of an Institutional Master Plan, the Planning Director shall be authorized to approve minor development projects within an EMI District, provided that the development:

(1) The project does not result in the creation of or the need for additional parking;

(2) The project does not result in an increase in the number of employees;

(3) The project does not result in the addition of more than twenty-five thousand (25,000) square feet of floor area; and

(4) The project does not result in the coverage of more than twenty-five thousand (25,000) square feet of site area.

(5) Shall not increase the height of any structure by more than one (1) story or fourteen (14) feet

(6) Shall be subject to Site Plan Review and Design Review in accordance with Section 922.04.E.4.

905.03.D.3 Institutional Master Planning Area

An Institutional Master Plan shall illustrate and identify the current land use of all the area within the EMI District, contiguous properties, and properties within one thousand (1,000) feet of the EMI District which are under the control of the institution.

905.03.D.4 Submission Requirements

An Institutional Master Plan shall include, at a minimum, the following information unless the Planning Director determines that such information is not necessary to evaluate the proposed Institutional Master Plan and the institution's future impacts on surrounding neighborhoods. Specific requirements of the full Institutional Master Plan shall be prepared by the Zoning Administrator and adopted by the City Planning Commission.

(a) Planning Horizon

The Institutional Master Plan shall cover a period of least twenty-five (25) years, commencing from the date of submission. Requirements shall vary for different time periods within the plan, according to the following.

(b) Mission and Objectives

The Institutional Master Plan shall include a statement that defines the organizational mission and objectives of the institution and description of how all development contemplated or defined by the Institutional Master Plan advances the goals and objectives of the institution. The statement should describe the population to be served by the institution, and any projected changes in the size or composition of that population. It should also specify any services to be provided to Pittsburgh residents in adjacent neighborhoods and in other areas of the city.

(c) Existing Property and Uses

The Institutional Master Plan shall include a description of land, buildings, and other structures owned or occupied by the institution as of the date of submission of the Institutional Master Plan. The following information shall be required:

(1) Illustrative site plans showing the footprints of each building and structure, together with roads, sidewalks, parking, landscape features and other significant site improvements;

(2) Land and building uses;

(3) Gross floor area in square feet;

(4) Building height in stories and feet;

(5) A description of off-street parking and loading areas and facilities, including a statement of the approximate number of parking spaces in each area or facility; and

(6) List of stormwater management best management practices (BMPs) with the following information for each BMP: location including latitude and longitude with street address, type of BMP, the year BMP was installed, and any associated stormwater volume control offsets information in accordance with Title Thirteen: Stormwater Management.

(d) Needs of the Institution

The Institutional Master Plan shall include a summary and projection of the institution's current and future needs for the following facilities:

(1) Academic;

(2) Service;

(3) Research;

(4) Office;

(5) Housing;

(6) Patient care;

(7) Public assembly;

(8) Parking; and

(9) Other facilities related to the institutional use.

(e) Ten-Year Development Envelope

The Institutional Master Plan shall include a description of the envelope within which development will occur in a ten-year time frame. The development envelope is the maximum amount of development proposed by an institution, which can be supported through impact studies. The intent of this provision is to provide the institution with flexibility regarding the future development potential of its campus, while addressing the potential impacts of that development on the surrounding neighborhoods.

The Development Envelope shall include the following:

(1) Location of each potential development site;

(2) Maximum Floor Area of structures for each potential development site;

(3) Total Maximum Floor Area for Institutional Master Plan structures;

(4) Height of possible structures;

(5) Required setbacks on each parcel;

(6) Other factors which may affect the size and form of buildings;

(7) Total number and location of parking spaces which will occur within a ten-year period; and

(8) Proposed stormwater management strategy including the type and location of stormwater best management practices and stormwater volume control offsets planned in relation to future development.

(f) Twenty-five Year Development Sites

The Institutional Master Plan shall include written and graphic materials identifying future development sites in addition to those noted in the Ten-Year Development Envelope. This information shall include, at a minimum, the size and location of each parcel which may be developed within a twenty-five year period.

(g) Transportation Management Plan

The Institutional Master Plan shall include a transportation impact study of the full development window and parking management plan. Based on the results of the transportation study, the applicant shall identify the ~~that identifies any traffic~~ mitigation measures ~~to be employed~~ needed to meet the needs of multimodal trips to the site. This should include provision for transit, cyclist, and pedestrian facilities and form the basis of the Transportation Demand Management Plan in accordance with 914.10.

(h) Environmental Protection Plan

The Institutional Master Plan shall identify all sensitive environmental resources within the Institutional Master Plan area, as well as any view corridors that traverse the Institutional Master Plan area. The Institutional Master Plan shall identify Environmental Overlay Districts that affect the Institutional Master Plan area and shall include reports on those conditions as required in Chapter 906. The Institutional Master Plan shall identify areas of the Institutional Master Plan area which may be subject to the Environmental Performance Standards of Chapter 915. The plan shall identify the measures that will be used to mitigate impacts for each of these conditions.

(i) Open Space and Pedestrian Circulation Plan

The Institutional Master Plan shall include open space and pedestrian circulation guidelines and objectives, including a description of the circulation system to be provided through the campus and plans for ensuring the accessibility of pedestrian areas and open spaces. 9

(j) Urban Design Guidelines

The Institutional Master Plan shall include design guidelines and objectives for new and renovated

buildings and structures to assure their compatibility with supporting neighborhoods and districts and to minimize potential adverse impacts on historic structures and historic districts. Urban design guidelines shall include listings of appropriate materials, height, bulk, massing, and colors that will be used to guide the course of proposed and future development.

(k) Neighborhood Protection Strategy

The Institutional Master Plan shall identify standards and programs that will be put in place to ensure that the quality of the surrounding neighborhoods is maintained or enhanced.

905.03.D.5 Compliance with Institutional Master Plan

No building permit or Certificate of Occupancy shall be issued for any project within an EMI District until the Zoning Administrator, upon the recommendation of the Planning Director, certifies that the proposed project is consistent with an approved Institutional Master Plan which has not expired. Such a certification may be found if the proposed project is clearly identified in the approved Institutional Master Plan or if the project is found to create minimal impact according to the following criteria:

(a) The project does not result in the creation of ~~or the need for~~ additional parking;

(b) The project does not result in an increase in the number of employees;

(c) The project does not result in the addition of more than twenty-five thousand (25,000) square feet of floor area; and

(d) The project does not result in the coverage of more than twenty-five thousand (25,000) square feet of site area.

(e) Shall be subject to Site Plan Review and Design Review in accordance with Section 922.04.E.4.

Section 3. The Pittsburgh Code, Title Nine, Zoning Code, Article II, Base Zoning, is hereby amended at Chapter 905 Special Purpose Districts as follows:

905.04.I. Parking

In addition to the Parking, Loading and Access requirements of Chapter 914, the following limitations on parking shall apply. In the case of conflict with other provisions of the Code, these provisions control in the RIV District.

~~905.04.I.1. Required Parking~~

~~a. The minimum parking required in the RIV District is fifty (50) percent of the minimum parking required in Schedule A of Section 914.02.A, unless otherwise provided.~~

~~b. The maximum parking limitation is the minimum parking required listed in Schedule A of Section 914.02.A.~~

~~c. Uses requiring parking demand analysis shall provide parking in accordance with [Section] 914.02.E without modification.~~

~~d. Reduction to required parking minimums may be available by contributing to a mobility improvement trust.~~

~~905.04.I.2.~~ 905.04.I.1. Surface Parking Lot Restriction

In the RIV-MU, RIV-IMU, and RIV-GI, Nno surface parking shall exceed ~~seventy-five (75)~~ twenty- five (25) parking spaces on a single Zoning Lot or group of lots under common ownership. Surface parking is prohibited in the RIV-NS. Tuck-in parking, located at the rear and underneath the building shall not be considered surface parking. Tuck-in parking shall be accessed from the lower-order street or Way. The Zoning Administrator, in consultation with the Director of the Department of Mobility and Infrastructure, may grant an exemption where the applicant sufficiently demonstrates that access is not practical given characteristics specific to the site or Right of Way.

a. Any surface parking lot located between a building and the riverfront, including across a street, shall have a maximum of fifteen (15) parking spaces.

b. Except otherwise stated in Section 905.04.I.2.1.d, temporary surface parking lots during phased developments may exceed the above parking limits of Section 905.04.I, and shall be approved as an Administrator's Exception in accordance with Section 922.08, subject to the following standards:

(1) An application for a temporary surface parking Lot must be submitted along with a Project Development Plan application, in accordance with Section 905.04.C.3. The Project Development Plan application shall be for an occupied structure, excluding Structured Parking uses. Occupancy for a temporary surface parking lot shall not be issued until a building permit has been issued for construction of the structure approved in the Project Development Plan.

(2) A Certificate of Occupancy for a temporary surface parking Lot shall expire after a period of three (3) years from the date of issuance. One (1) extension for an additional three (3) years may be permitted as a Special Exception in accordance with Section 922.07, At the time the temporary surface parking lot expires and the use shall be deemed to be abandoned in accordance with Section 921.02.B.

(3) The temporary surface parking lot shall be screened in accordance with Section 918.03 and provide street trees in accordance with Section 918.02.C. The landscaping provisions of Section 918.02.B shall not apply to temporary surface parking lots.

c. In the RIV-IMU between 21 st Street and 54 th Street, temporary surface parking lots during phased developments may exceed the above parking limits of Section 905.04.I, and shall be approved as a Special Exception in accordance with Section 922.07, subject to the following standards:

(1) An application for a temporary surface parking Lot must be submitted along with a Project Development Plan application, in accordance with Section 905.04.C.3. The Project Development Plan application shall be for an occupied structure, excluding Structured Parking uses. Occupancy for a temporary surface parking lot shall not be issued until a building permit has been issued for construction of the structure approved in the Project Development Plan.

(2) A contribution shall be made to the City of Pittsburgh Mobility Improvement Trust ~~when established~~ in accordance with Section 914.01.C.

(3) A Certificate of Occupancy for a temporary surface parking Lot shall expire after a period of three (3) years from the date of issuance. One (1) extension for an additional three (3) years may be permitted as a Special Exception in accordance with Section 922.07,

<https://library.municode.com/pa/pittsburgh/codes/code_of_ordinances?
~~(3)[(4)]~~ (4) The temporary surface parking lot shall be screened in accordance with Section <https://library.municode.com/pa/pittsburgh/codes/code_of_ordinances?

918.03 and provide street trees in accordance with Section 918.02.C. The landscaping provisions of Section 918.02.B shall not apply to temporary surface parking lots.

~~a.[d.] No surface parking shall exceed seventy-five (75) parking spaces on a single Zoning Lot or group of lots under common ownership.~~

~~b.[e.] Any surface parking lot located between a building and the riverfront, including and the maximum parking limitation across a street, shall have a maximum of fifteen (15) parking spaces.~~

Section 4. The Pittsburgh Code, Title Nine, Zoning Code, Article II, Base Zoning, is hereby amended at Chapter 908 Public Realm Districts as follows:

~~UPR - 908.04.C.5 Off-Street Parking~~

~~Off-street parking spaces shall be provided in accordance with the minimum and maximum standards below. Where application of the standard results in a fraction of a space, the number of spaces allowed shall be calculated by rounding the number of spaces allowed down to the nearest full space when the fraction is less than 0.5 spaces and rounding up to the next full space when the fraction is equal to or greater than 0.5 spaces. The parking schedule in this section shall not apply to the Bicycle Parking Requirement of Section 914.05.D.~~

~~Use Type~~	~~Minimum Off-Street Automobile Spaces Required~~	~~Maximum Off-Street Automobile Spaces Allowed~~
~~**Residential Uses**~~	~~Exempted in accordance with Section 914.04. - Off-Street Parking Exemption/Reduction Areas~~	~~0.9 per unit~~
~~**Commercial Uses**~~		~~1 per 1,000 s.f.~~
~~Includes all permitted non-residential uses other~~		
~~than Manufacturing and Assembly, Welding or~~		
~~Machine Shop~~		
~~**Industrial Uses**~~		~~Parking Demand Analysis~~
~~Includes Manufacturing and Assembly, Welding or~~		~~Required, see Section~~
~~Machine Shop~~		~~914.02.B~~

Section 5. The Pittsburgh Code, Title Nine, Zoning Code, Article IV, Planning Districts, is hereby amended at Chapter 909 Planned Development Districts as follows:

909.01.I.4 SP-4(IV), East Station Square Subdistrict

The SP-4(IV) East Station Square subdistrict is generally bounded by Smithfield Street, E. Carson Street, the easterly line of Block and Lot 4-D-45 and the Monongahela River.

(a) Use Regulations

Within the SP-4(IV) subdistrict, land and structures may be used, and structures may be erected, altered, demolished or enlarged for only the following uses:

(1) Multi-unit residential;

(2) Retail Sales and Services (General) or (Limited);

(3) Restaurant (General) or (Limited), including Sidewalk Cafe;

(4) Office (General) or (Limited)

(5) Cultural Service or Library (General) or (Limited);

(6) Hotel/Motel (General) or (Limited)

(7) Recreation and Entertainment, Indoor (General) or (Limited)

(8) Parking, including Parking, Commercial (General) and Parking Structure (General);

(9) Grocery Store (General) or (Limited);

(10) Parks and Recreation (Limited); and

(11) Public Assembly (General) or (Limited).

(b) Compliance with Preliminary Land Development Plan

Development regulations within the Preliminary Land Development Plan, as amended, are incorporated herein and compliance with such requirements shall be a prerequisite of approval of a Final Land Development Plan.

(c) Maximum Height

The maximum height of structures hereafter erected or enlarged or used in the SP-4(IV) subdistrict shall be as shown on the Preliminary Land Development Plan, as amended.

(d) Minimum Height

All buildings in the SP-4(IV) subdistrict shall be greater than thirty-five (35) feet in height.

(e) Building Setbacks

All buildings within the SP-4(IV) subdistrict shall comply with the setback requirements of the Preliminary Land Development Plan, as amended.

(f) Build-to Lines

Build-to lines for the SP-4(IV) subdistrict shall be as shown on the Preliminary Land Development Plan, as amended.

(1) Buildings whose primary use is multiple family dwellings shall have a minimum of forty-five (45) percent of the building located at the build-to line, with an additional thirty-five (35) percent of

the building located within thirty (30) feet of the build-to line; building facades within thirty (30) feet of the build-to line shall be delineated at the build-to line by a street wall (e.g., landscape treatment, decorative fencing, seat walls, shade structure, etc.) having a minimum height of thirty- six (36) inches.

(2) Buildings whose primary use is as a hotel shall have a minimum of fifty (50) percent of the building located at the build-to line.

(3) All other buildings shall have a minimum of sixty (60) percent of the building located at the build-to line, with an additional twenty (20) percent of the building located within fifteen (15) feet of the build-to line.

(4) Openings in buildings for garage and service entrances shall be included in determining compliance with the foregoing requirements.

(g) Other Development Standards.

All development to be approved in the SP-4(IV) subdistrict shall comply with the following standards:

(1) Buildings shall be arranged within blocks but in no event shall the maximum length of any block exceed seven hundred (700) lineal feet. If blocks are longer than five hundred (500) lineal feet, the Planning Commission may require a public pedestrian walkway through the block that is open during normal business hours.

(2) Loading, trash collection, and similar facilities shall be incorporated into the overall design of a building so that the visual and acoustic impacts of these functions are either substantially contained within the building or otherwise screened so as to be out of the direct street-level view from adjacent properties and public streets. Loading and unloading areas shall be situated so as to not conflict with pedestrian movement.

(3) Parking structures or those portions of buildings within the SP-4(IV) subdistrict used exclusively for parking purposes shall comply with Sections 914.~~09~~ 07.G.1, 914.~~09~~ 07.G.3 and 914.~~09~~ 07.G.4 of the Code, but need not comply with Section 914.~~09~~ 07.G.2 of the Code.

(4) No building wall visible from a street or publicly accessible pedestrian easement shall contain a non-articulated condition greater than seventy (70) lineal feet in length. Building wall articulation shall be achieved through vertical steps no smaller than six (6) inches in width, building entrances, lobbies, doors, windows or similar features.

~~(h) Off-Street Parking~~

~~Minimum off-street parking shall be determined by a parking demand analysis pursuant to Section 914.04.~~

(i) (h) Other Parking Standards

The Preliminary Land Development Plan for the SP-4(IV) subdistrict shall limit the area for Commercial Parking to that portion of the district lying to the east of the light rail public transit bridge as identified on the Preliminary Land Development Plan; provided, however, that commercial parking and accessory surface parking may continue as an allowed use within all of the SP-4(IV) subdistrict until completion of construction of all buildings shown on the conceptual master plan component of the Preliminary Land Development Plan. Shared parking between buildings shall be permitted and access between buildings and parking structures by way of upper story elevation bridges is allowed.

(j) (i) Signage

All business signs and identification signs permitted in the GT and DR zoning districts pursuant to Section 919.03.M.7 and Section 919.03.M.8 shall be permitted in the SP-4(IV) subdistrict, except that only ground signs no higher than ten (10) feet in height and no greater than eighty (80) square feet in area (single face) are permitted within fifty (50) feet of the northern boundary of the SP-4(IV) subdistrict Lot and Block Number 4-D-60 at the time of this ordinance adoption, and no wall-mounted signs are allowed within fifty (50) feet of the northern boundary of Lot and Block Number 4-D-60 at the time of this ordinance adoption.

909.01.I.5 Regulations Applicable Throughout the SP-4 District The

following regulations shall apply throughout the SP-4 district:

(a) Height

That portion of the facade of any structure above one hundred (100) feet in height shall be no greater than one hundred twenty (120) feet in width when viewed directly opposite the structure from the river, perpendicular to the shore.

(b) Signs

Signs and sign structures shall be subject to Sign Guidelines adopted by the Planning Commission as a component of the Preliminary Land Development Plan.

(c) Floor Area Ratio

The maximum floor area ratio for the entire SP-4 District shall be four (4).

(d) Traffic Analysis

Traffic and Parking Demand Analyses shall be required for all new development in a format specified by the Zoning Administrator. The Zoning Administrator shall review the submitted analyses, including all sources of data, to establish appropriate traffic and parking mitigation measures. The costs for constructing and implementing all required mitigation measures shall be the responsibility of the Applicant.

(e) Urban Open Space

At least ten (10) percent of the entire SP-4 district shall be provided and maintained as Urban Open Space.

(f) Useable Open Space

For residential uses, Useable Open Space shall be provided in accordance with Land Use Intensity Rating System of the Subdivision Regulations and Standards.

(g) Height Exceptions

The following exceptions to the height regulations established for the SP-4 district and its subdistricts shall be permitted:

Exceptions in height which are authorized by the Zoning Administrator, according to the following:

(1) Erection above the height limit of certain portions of structures according to the following standards:

Structures with a gross floor plate not in excess of twenty thousand (20,000) square feet: one hundred fifty (150) feet; one hundred seventy (170) feet if a residential building.

Structures with a gross floor plate not in excess of fifteen thousand (15,000) square feet: One hundred eighty (180) feet; two hundred (200) feet if a residential building.

(2) No more than two (2) structures within the SP-4(I) subdistrict shall be in excess of one hundred fifty (150) feet in height.

(3) No more than one (1) structure within the SP-4(II) subdistrict shall be in excess of one hundred fifty (150) feet in height.

Section 6. The Pittsburgh Code, Title Nine, Zoning Code, Article IV, Planning Districts, is hereby amended in Chapter 910.01, Golden Triangle District, as follows:

910.01.C General Provisions

The provisions in this section apply to all GT Districts, unless otherwise stated.

910.01.C.1 Use Regulations

(a) Primary Uses

Primary uses shall be allowed in the GT District in accordance with the Use Table of Sec. 911.02.

(b) General Limitations

(1) All merchandise and products shall be sold only at retail, unless otherwise stated.

(2) There may be manufacture, compounding, processing or treatment of products that is clearly incidental and essential to a retail store or business, only when the major portion of such products is to be sold at retail on the premises.

(3) Uses, operations or products shall not be noxious or offensive by reason of the emission of odor, dust, smoke, gas, vibration, noise or other similar causes. See Chapter 917 for additional regulations regarding Operational Performance Standards.

(4) Unit group development shall be permitted.

(c) Project Development Plan Review

Developments in the GT district that are subject to Project Development Plan review and approval

shall comply with the review process and criteria specified in Sec. 922.10 and all applicable standard of this Code. Developments that do not require Project Development Plan Review are:

(1) Structures involving exterior alterations not in excess of two hundred fifty thousand dollars ($250,000.00); and/or

(2) Interior renovations only.

(d) Site Plan Review

The following development actions are subject to Design Review, and Site Plan Review and approval per Section 922.04:

(1) Structures involving exterior alterations not in excess of two hundred fifty thousand dollars ($250,000.00).

910.01.C.2 General Open Space Requirements

(a) Location

Open space required by the GT District regulations may be located on the same zoning lot as the principal use or on an adjacent zoning lot.

(b) Funds In-Lieu

The Planning Commission may approve the payment of funds in-lieu of the provision of open space in the following cases:

(1) On small sites where required open space would result in areas of limited public usefulness;

(2) In locations where required open space would be adjacent to existing large open spaces; and

(3) In specific locations such as historic districts or other areas where the adopted plans and policy documents applicable to the district indicate that open space is not desirable.

The funds from any approved, in-lieu payments shall be used by the City for the acquisition and development of open space elsewhere in the GT District. The amount of such payment shall be based upon the value of the land that would otherwise be required to be devoted to open space on the development site, plus the cost that would otherwise be incurred by the applicant for development of that space in accordance with the provisions of this section.

910.01.C.3 Urban Open Space Requirements

Urban Open Space shall be provided in accordance with GT subdistrict requirements and shall be located,

developed and maintained in accordance with the following standards.

(a) Components

The particular functions and kinds of Urban Open Space to be provided at a development site shall be based upon consideration of existing and projected pedestrian volumes and circulation patterns; the location, size and character of existing Urban Open Space in the vicinity of the development site; existing and proposed land use patterns; relation to public transportation; and objectives contained in the adopted plan and policy documents pertaining to the GT District.

(b) Development Standards

(1) Urban Open Space designed to facilitate pedestrian circulation or relieve pedestrian congestion shall be at the same level as abutting public sidewalks, shall provide a clear path or area for movement, and shall be accessible to persons with disabilities throughout the entire area.

(2) Urban Open Space designed to provide passive recreation space or informal activity areas shall abut and be accessible from a public sidewalk. A plaza or park may be located above or below the level of the abutting sidewalk or open space provided it is accessible to the handicapped. A plaza or park shall contain seating, permanent landscaping and lighting for night time illumination. The Urban Open Space shall be open without restriction to the general public at least during business hours normal to the area in which it is located and during periods of heavy pedestrian movement in the area.

(3) When a development site is adjacent to a bus stop or transit station, the required Urban Open Space shall be designed to provide access to and waiting areas for transit riders.

(4) Additional Urban Open Space required for developments which utilize the floor area bonus provisions of Sec. 910.01.C.4 may be provided as interior (urban open) space rather than as outdoor space. Interior Urban Open Space shall comply with the following standards:

(i) Entrances shall be clearly visible from adjacent sidewalks or Urban Open Space and shall be at least twenty (20) feet wide including doorways and glassed walls.

(ii) There shall be a sufficiently high level of natural illumination either through walls or glazed roof or ceiling areas to permit the maintenance of plants without additional light sources.

(iii) An interior space which functions as a building lobby shall not be used to fulfill an Urban Open Space requirement unless it also functions as a through-block passage accessible to the general public and contains seating available for use by the general public.

(iv) An interior Urban Open Space shall be accessible to persons with disabilities.

(v) An interior Urban Open Space shall be open without restriction to the general public at least during

normal business hours in the area in which it is located and during periods of heavy pedestrian movement in the area.

(vi) An observation deck or viewing area located on the top floor or roof of a building and designed to provide a panoramic view may be used to fulfill the additional Urban Open Space requirements, provided it is open and accessible to the general public during business hours normal to the area in which it is located.

(vii) A permanent gallery for the purpose of the display of works of fine art, available to the public without an admission fee, may be used to fulfill the additional Urban Open Space requirements, provided it is open to the general public during hours normal to museums and galleries, is easily accessible from the public sidewalk or Urban Open Space, and is operated by a not-for-profit institution.

(viii) Every Urban Open Space provided under the requirements of this Code shall be located and developed to relate harmoniously with development on adjacent sites and to contribute to the attractiveness and efficient functioning of the overall environment of the district.

910.01.C.4 Floor Area Bonuses

(a) Urban Open Space

In the event that additional Urban Open Space is provided in the proportions indicated below, maximum building floor area may exceed the floor area ratios specified for the applicable GT subdistrict but shall not exceed the applicable floor area ratio when calculated on the basis of gross lot area. Additional Urban Open Space shall be provided in proportion to the total increase in floor area resulting from the application of gross lot area, and shall be calculated as follows:

(1) In the GT-A, GT-B, GT-C and GT-E Districts:

Total required Urban Open Space = lot area x 20% x (total floor area/base floor area), where base floor area = maximum allowable floor area based on lot area.

(2) In the GT-D District:

Total required Urban Open Space = lot area x 60% x (total floor area/base floor area), where base floor area = maximum allowable floor area based on lot area.

(b) Transportation Facilities

In the event that transportation facilities as described below are provided and have the affect of reducing the use of automobiles in the GT District, maximum building floor area may exceed the floor area ratios specified for the applicable GT subdistrict by a maximum of twenty (20) percent, provided the transportation facilities and all improvements associated therewith shall be designed, located, developed and maintained as follows:

(1) Designed and developed as an integral part of the total development project and not as mere connections;

(2) Engineered and completed to accommodate a projected peak hour travel of at least four thousand (4,000) persons per weekday in all directions;

(3) Utilize separate or partially separate rights-of-way that use boarding areas engineered and completed to accommodate a projected peak hour travel of at least four thousand (4,000) persons per weekday in all directions;

(4) In addition the applicant must submit a duly executed agreement, in a form satisfactory to the City Solicitor, assuring that the facilities and improvements shall be operated and maintained for the life of the development for which this bonus is allowed.

(c) Ground Floor Retail

Affording a structure a floor area bonus equal to the floor area of retail commercial uses permitted within the district, provided that the uses are at street level, that entrance to each individual establishment is directly from the public sidewalks or Urban Open Spaces, that at least seventy-five (75) percent of the perimeter wall of such uses is glazed, and when it is demonstrated that the location of such uses strengthens retail patterns in the downtown.

910.01.C.5 Light Access

Buildings shall be designed to provide at least five (5) feet from the zoning lot line to a proposed affected window except when the zoning lot line is contiguous to a public right-of-way of ten (10) or more feet in width. An affected window is defined as a window that provides light, air and visibility to the outdoors not including glazing for architectural design. The five-foot space may be waived when a similar amount of open space is provided on the adjacent property with a recorded easement or similar type of document

Section 7. The Pittsburgh Code, Title Nine, Zoning Code, Article V, Use Regulations, is hereby amended at Chapter 911 Primary Uses as follows:

CHAPTER 911: PRIMARY USES

911.01. General.

911.01.A Use Type

Each of the use types listed in Use Table are defined in Chapter 926.

911.01.B Uses Permitted By-Right

Uses identified in a district column with a "P" are uses permitted By-Right and shall be allowed in the

respective district, subject to compliance with all other applicable regulations of this Code.

911.01.C Uses Requiring Review by the Zoning Administrator

Uses identified in a district column with an "A" are Administrator Exceptions and shall be allowed the respective district only if reviewed and approved in accordance with the Zoning Administrator Exception review procedures of Sec. 922.08.

911.01.D Uses Requiring Review by the Zoning Board of Adjustment

Uses identified in a district column with an "S" are Special Exceptions and shall be allowed in the respective district only if reviewed and approved by the Zoning Board of Adjustment in accordance with the Special Exception review procedures of Sec. 922.07.

911.01.E Conditional Uses Requiring Review by the City Council

Uses identified in a district column with a "C" are Conditional Uses and shall be allowed in the respective district only if reviewed and approved in accordance with the Conditional Use review procedures of Sec. 922.06.

911.01.F Not Permitted

Uses that are not associated with a letter in a district column shall be considered prohibited uses and shall not be allowed in the respective district unless otherwise expressly permitted by other regulations of this Code.

911.01.G Standards

The "Standards" column of the Use Table contains a reference to specific standards that apply to listed uses in one (1) or more of the districts in which such use is allowed. Complete text of the Use Standards can be found in Sec. 911.04, which immediately follows the Use Table.

911.02. Use Table.

Use Classification The Pittsburgh Urban Zoning Code P = Permitted By Right A = Administrator Exception S = Special Exception C = Conditional Use	Base Zoning Districts*																									Standard See Section 911.04.x
	Residential					Mixed Use										Special			DT		RIV					
* As Base Zoning District Regulations, all uses may be subject to additional regulations imposed by applicable Overlay Zoning Districts.	R1D	R1A	R2	R3	RM	NDO	LNC	NDI	UNC	HC	GI	UI	UC-MU	UC-E	R-MU	P	H	EMI	GT		RM	MU	NS	GI	IMU	
Community Center (Limited) means a Community Center which primarily serves the community in which it exists, and with a Gross Floor Area of less than 5,000 square feet a~~nd for which fewer than 10~~	C	S	S	S	S	A	P	P	P	P		A	P	P	A	P		A	P		S	P	P		A	A.14

~~off-street parking spaces are provided~~.																										

Community Center (General) means a Community Center with a Gross Floor Area of 5,000 square feet or greater~~, or one for which 10 or more off-street parking spaces are provided~~.						S	P	P	P	P		A	P	P	A	S		A	P			P	P		A	A.14

Section 8. The Pittsburgh Code, Title Nine, Zoning Code, Article V, Use Regulations, is hereby amended at Chapter 911 Primary Uses as follows: 911.02. Use Table.

Parking, Commercial (Limited) means a Commercial Parking area with less than 25 spaces.							S	A	A	P	A	P						S				S	~~S~~	A	S	A.44
Parking, Commercial (General) means a Commercial Parking area with 25 or more spaces.								S	S	A	P	P						S				S	~~S~~	S	S	A.45

Section 9. The Pittsburgh Code, Title Nine, Zoning Code, Article V, Use Regulations, is hereby amended at Chapter 911 Primary Uses as follows:

911.02. Use Table.

Use Classification The Pittsburgh Urban Zoning Code P = Permitted By Right A = Administrator Exception S = Special Exception C = Conditional Use	Base Zoning Districts*					Standard See Section 911.04.x
	Residential	Mixed Use	Special	DT	RIV	

* As Base Zoning District Regulations, all uses may be subject to additional regulations imposed by applicable Overlay Zoning Districts.	R1D	R1A	R2	R3	RM	NDO	LNC	NDI	UNC	HC	GI	UI	UC-MU	UC-E	R-MU	P	H	EMI	GT		RM	MU	NS	GI	IMU	
Recreation and Entertainment, Indoor (Limited) means an Indoor Recreation and Entertainment use ~~for which fewer than 20 parking spaces are provided~~ with a Gross Floor Area of less than 12,500 square feet.							P	P	P	P		P	P	P	P	A		A	P			P	P		P	A.48

Recreation and Entertainment, Indoor (General) means an Indoor Recreation and Entertainment use ~~for which 20 or more parking spaces are provided~~ with a Gross Floor Area of 12,500 square feet or more.						S	S	A	P		P	A	A		A		S	P			P	P		P	A.47

Section 10. The Pittsburgh Code, Title Nine, Zoning Code, Article V, Use Regulations, is hereby amended at Chapter 911 Primary Uses as follows:

911.02. Use Table.

Use Classification The Pittsburgh Urban Zoning Code P = Permitted By Right A = Administrator Exception S = Special Exception C = Conditional Use	Base Zoning Districts*					Standard See Section 911.04.x
	Residential	Mixed Use	Special	DT	RIV	

* As Base Zoning District Regulations, all uses may be subject to additional regulations imposed by applicable Overlay Zoning Districts.	R1D	R1A	R2	R3	RM	NDO	LNC	NDI	UNC	HC	GI	UI	UC-MU	UC-E	R-MU	P	H	EMI	GT		RM	MU	NS	GI	IMU	
Religious Assembly (Limited) means a Religious Assembly use that has a Gross Floor Area of less than 5,000 square feet. ~~for which fewer than 20 parking spaces are required~~	S	S	S	S	S	A	P	P	P	P	S	P	P	P	P			A	P		S	P	P		P	A.53
Religious Assembly (General) means a Religious Assembly use that has a Gross Floor area of 5,000 square feet or more. ~~for which 20 or more parking spaces are required~~	S	S	S	S	S	S	A	P	P	P	S	P	P	P	P			S	P		S	A	P		P	A.53

Section 11. The Pittsburgh Code, Title Nine, Zoning Code, Article V, Use Regulations, is

hereby amended at Chapter 911 Primary Uses as follows:

911.02. Use Table.

Use Classification The Pittsburgh Urban Zoning Code P = Permitted By Right A = Administrator Exception S = Special Exception C = Conditional Use	Base Zoning Districts*																								Standard See Section 911.04.x
	Residential					Mixed Use										Special			DT		RIV					
* As Base Zoning District Regulations, all uses may be subject to additional regulations imposed by applicable Overlay Zoning Districts.	R1D	R1A	R2	R3	RM	NDO	LNC	NDI	UNC	HC	GI	UI	UC-MU	UC-E	R-MU	P	H	EMI	GT		RM	MU	NS	GI	IMU	
Vocational School (Limited) means a Vocational School ~~for which fewer than 25 parking~~							P	P	P	P	P	P	P	P	S			A	P			P	P	P	P	A.77

~~spaces are required~~ with a Gross Floor Area of less than 12,500 square feet.																									
Vocational School (General) means a Vocational School ~~for which 25 or more parking spaces are required~~ with a Gross Floor Area of 12,500 square feet or more.							A	S	A	P	P	P	S	P				A	P			S	P	P	P	A.77

Section 12. The Pittsburgh Code, Title Nine, Zoning Code, Article V, Use Regulations, is hereby amended at Chapter 911 Primary Uses as follows:

911.04.A.3 Amusement Arcade

Amusement Arcades shall be subject to the following standards:

(a) Location in Historic District Prohibited

The building shall not be located within a City Council designated "Historic District" per Chapter 1007 of the Pittsburgh Code of Ordinances.

(b) Located in Building Containing Residential Dwelling Units

When the arcade is located in a building containing residential dwelling units, the space to be occupied for arcade shall not be located directly above or beneath the residential space.

(c) Separation from Residential Zoning Districts and Historic Districts

The arcade shall not be located within three hundred (300) feet of a LNC District, residential zoning district or City Council designated "Historic District," as measured from each pedestrian entrance or exit of the arcade to the nearest boundary of the LNC District, residential zoning district or "Historic District."

(d) Separation From Other Uses

A lot containing an arcade shall not be located within five hundred (500) feet of a lot containing any of the following:

(1) Other Amusement Arcade;

(2) Religious Assembly;

(3) Elementary or Secondary School;

(4) Library;

(5) Cultural Service;

(6) Community Center; or

(7) Park or Recreation (Limited).

(e) Impact on Surrounding Community

Before approving an arcade use, the Approving Body shall determine that the proposed use shall not create detrimental impacts on the community, taking into consideration traffic generation, the relationship of the proposed use to surrounding structures; the availability of ~~parking~~ multiple modes of transportation; and hours of operation; and the volume of people.

Section 13. The Pittsburgh Code, Title Nine, Zoning Code, Article V, Use Regulations, is hereby amended at Chapter 911 Primary Uses as follows:

911.04.A.5 Assembly, Public (Limited**)**

(a) In NDI, UNC, UI, RIV-MU, RIV-IMU, UC-E, UC-MU, and HC districts Assembly, Public (Limited) uses shall be subject to the following standards:

1. A traffic analysis consistent with the guidelines established by the Department of Mobility and Infrastructure shall be submitted demonstrating that the proposed development will not create traffic congestion in the district;

~~2. Parking shall be provided in a location and manner that allows for all parking required by the facility, and all traffic created by the facility, to be located outside of residential districts; and~~ Transportation demand generated by the facility shall be managed in accordance with 914.10 to prevent any potential detrimental impacts on residential districts;

3. The Approving Body shall determine that such use will not create detrimental impacts on the surrounding properties, taking into consideration the probable traffic generation, ~~parking needs,~~ availability of multiple modes of transportation, noise generation, and the hours of operation; and

4. The proposed use shall be subject to the Site Plan Review Procedures of Section 922.04.

(b) In P District

Assembly, Public (Limited) uses shall be subject to the following standards in the P District:

(1) A traffic analysis shall be submitted demonstrating that the proposed development will not create traffic congestion in the district;

~~(2) Parking shall be provided in a location and manner that allows for all parking required~~

~~by the facility, and all traffic created by the facility, to be located outside of residential districts;~~ Transportation demand generated by the facility shall be managed in accordance with 914.10 to prevent any potential detrimental impacts on residential districts;

(3) The Approving Body shall determine that such use will not create detrimental impacts on the surrounding properties, taking into consideration the probable traffic generation, ~~parking needs,~~ availability of multiple modes of transportation, noise generation, and the hours of operation; and

(4) All facilities shall be designed to be compatible with the surrounding landscape, such that the minimum possible grading will be required and the minimum disturbance and removal of existing vegetation will be required.

(c) In EMI districts Assembly, Public (General) uses shall be subject to the following standards:

(1) The design shall include devices which prevent noise associated with the use of the facility from being heard on other properties in the vicinity;

(2) A traffic analysis shall be submitted demonstrating that the proposed development will not create traffic congestion in the district;

(3) The proposed use shall be in compliance with an approved Institutional Master Plan; and

(4) The proposed use shall be subject to the Project Development Plan procedures of Section 922.10.

911.04.A.6 Assembly, Public (General)

(a) In HC and UI Districts

Assembly, Public (General) uses shall be subject to the following standards in the HC and UI Districts:

(1) A traffic study in a form approved by the Zoning Administrator shall be submitted with the application, and shall address parking and traffic impacts of the proposed development. The transportation study shall illustrate that the proposed development will not create traffic congestion on the surrounding streets, and that residential streets in the vicinity shall not be used for parking for the proposed development;

(2) The design shall include devices which prevent noise associated with the use of the facility from being heard on other properties in the vicinity;

(3) The height and bulk of the proposed structure shall be designed as to minimize blocking of views from adjacent residential properties;

(4) A traffic analysis shall be submitted demonstrating that the proposed development will not create traffic congestion in the district;

~~(5) Parking shall be provided in a location and manner that allows for all parking to be located outside of residential districts; and~~ Transportation demand generated by the facility shall be managed in accordance with 914.10 to prevent any potential detrimental impacts on residential districts; and

(6) The Approving Body shall determine that such use will not create detrimental impacts

on the surrounding properties, taking into consideration the probable traffic generation, ~~parking needs,~~ availability of multiple modes of transportation, generation of noise and the hours of operation.

(b) In P District

Assembly, Public (General) uses shall be subject to the following standards in the P District:

(1) A traffic analysis shall be submitted demonstrating that the proposed development will not create traffic congestion in the district;

(2) Transportation demand generated by the facility shall be managed in accordance with 914.10 to prevent any potential detrimental impacts on residential districts;

(3) The Approving Body shall determine that such use will not create detrimental impacts on the surrounding properties, taking into consideration the probable traffic generation, ~~parking needs,~~ availability of multiple modes of transportation, noise generation, and the hours of operation; and

(4) All facilities shall be designed to be compatible with the surrounding landscape, such that the minimum possible grading will be required and the minimum disturbance and removal of existing vegetation will be required.

(c) In EMI Districts

(1) [Reserved.]

(2) The design shall include devices which prevent noise associated with the use of the facility from being heard on other properties in the vicinity;

(3) The height and bulk of the proposed structure shall be designed as to minimize blocking of views from adjacent residential properties;

(4) A traffic analysis shall be submitted demonstrating that the proposed development will not create traffic congestion in the district;

~~(5) Parking shall be provided in a location and manner that allows for all parking to be located outside of residential districts;~~ Transportation demand generated by the facility shall be managed in accordance with 914.10 to prevent any potential detrimental impacts on residential districts;

(6) The approving body shall determine that such use will not create detrimental impacts on the surrounding properties, taking into consideration the probable traffic generation, ~~parking needs,~~ availability of multiple modes of transportation, generation of noise and the hours of operation; and

(7) The proposed use shall be in compliance with an approved Institutional Master Plan;

(8) The proposed use shall be subject to the Project Development Plan procedures of Section 922.10.

(d) In RIV Districts

(1) A traffic study in a form approved by the Zoning Administrator shall be submitted with the application, and shall address parking and traffic impacts of the proposed development. The transportation study shall illustrate that the proposed development will not create traffic

congestion on the surrounding streets, and that residential streets in the vicinity shall not be used for parking for the proposed development;

(2) The design shall include devices which prevent noise associated with the use of the facility from being heard on other properties in the vicinity;

~~(3) Parking shall be provided in a location and manner that allows for all parking to be located outside of residential districts; and~~ Transportation demand generated by the facility shall be managed in accordance with 914.10 to prevent any potential detrimental impacts on residential districts; and

(4) The Approving Body shall determine that such use will not create detrimental impacts on the surrounding properties, taking into consideration the probable traffic generation, ~~parking needs,~~ availability of multiple modes of transportation, generation of noise and the hours of operation.

911.04.A.7 Bed and Breakfast

Bed and Breakfast uses shall be subject to the following standards:

(a) The Bed and Breakfast use shall have a manager available on the premises on a twenty-four-hour-day basis while guests are on the premises;

(b) Food and beverage service shall be limited to breakfast for registered, paying overnight guests except in the case of limited social and business functions held on premises;

(c) Guests shall be limited to a maximum length of stay of fifteen (15) consecutive days in any thirty-day period;

(d) Wherein limited retail sales limited to incidental, occupant convenience items, and marketing and promotional items of our city are allowed to be sold to guests and visitors on the premises provided that there is no indication of items for sale by way of exterior signs or window displays;

(e) Wherein limited social and business functions may occur provided that:

(1) The hours are limited to no later than 6:00 p.m. daily for bed and breakfasts (Limited); and no later than 11:00 p.m. Monday through Saturday, and 6:00 p.m. on Sunday for bed and breakfasts (General). No bed and breakfast shall host more than two (2) scheduled social or business functions per week.

~~(2) Valet parking shall be provided having a minimum of one (1) parking stall for every four (4) occupants permitted under the occupancy placard issued by the Bureau of Building Inspection.~~

(3) (2) Strict compliance with the local noise ordinance is maintained.

(4) (3) Occupancy shall not exceed the number of persons listed on the occupancy placard by the Bureau of Building Inspection.

(f) Any structure in which a Bed and Breakfast use is to be located shall not be enlarged to provide for more guest rooms or guest room accommodations if such an enlargement would

intrude on any front, side or rear setback requirements of the zoning district in which it is located;

(g) A license shall be obtained as provided by Chapter 701 of the Pittsburgh Code of Ordinances prior to issuance of a Certificate of Occupancy;

(h) A daily register of guests shall be maintained and made available for inspection by any City of Pittsburgh Code Enforcement Officer; and

(i) No more than one (1) Bed and Breakfast use shall be permitted in a building and only in a single-unit residential structure.

(j) The Bureau of Building Inspection shall designate at least on enforcement officer to be available during evening hours on weekdays and weekends to enforce the restrictions contained in this chapter.

(k) A Bed and Breakfast Problem Solving Task Force is hereby created comprising Public Safety, Bureau of Building Inspection, City residents living adjacent to Bed and Breakfast, and representatives of Bed and Breakfast Association to (1) receive complaints and mediate disputes and (2) initiate a report to City Council at the end of twelve (12) months with recommendations for legislative amendments if needed. This shall take effect upon the date of the Mayor's signature (March 26, 1999), and will expire one (1) year later.

911.04.A.8 Bed and Breakfast (Limited)

(a) In Residential and Grandview Public Realm, RIV-RM, and EMI Districts, Bed and Breakfast (Limited) uses shall be subject to the following standards:

Bed and Breakfast (Limited) uses shall be subject to the following standards in all residential and Grandview Public Realm zoning districts:

(1) The Bed and Breakfast use shall be limited to no more than three (3) guest rooms, to be occupied by a total of no more than five (5) guests;

(2) An identification sign, non-illuminated and no larger than four (4) square feet in size, shall be permitted only on the wall of the structure;

~~(3) Automobile parking space shall be provided on the basis of one (1) parking stall for the resident operator and one (1) parking stall for each guest room within the boundaries of the same zoning lot in which the Bed and Breakfast use is approved.~~ The zoning lot shall not include any building that is intended to be razed for parking purposes or has been razed at any time during a three-year period prior to an application for occupancy as a Bed and Breakfast; and

(4) In R1D-VL and R1D-L Districts, a bed and breakfast use may only be located in a historically designated structure.

~~(b) In the UC-E, UC-MU, and R-MU, parking shall be provided in accordance with the Parking Demand Analysis provisions of Section 914.02.B.~~

911.04.A.9 Bed and Breakfast (General)

(a) In R2, RM, Grandview Public Realm, RIV-RM and EMI Zoning Districts, Bed and

Breakfast (General) uses shall be subject to the following standards:

(1) The Bed and Breakfast use shall be limited to no more than ten (10) guest rooms and each guest room may provide lodging for up to two (2) individuals, unless children under the age of sixteen
(16) years are accompanying the guests, and in no instance shall the total number of guests in a Bed and Breakfast use exceed thirty (30);

(2) An identification sign, non-illuminated and no larger than four (4) square feet in size shall be permitted only on the wall of the structure; and

~~(3) Automobile parking shall be provided on the basis of and shall not exceed two (2) parking stalls for the resident operator and one (1) parking stall for each guest room within the boundaries of the same zoning lot in which the Bed and Breakfast use is approved.~~ The zoning lot shall not include any building that is intended to be razed for parking purposes or has been razed at any time during a three-year period prior to an application for occupancy for a Bed and Breakfast use.

~~(b) In the UC-E, UC-MU, and R-MU, parking shall be provided in accordance with the Parking Demand Analysis provisions of Section 914.02.B.~~

Section 14. The Pittsburgh Code, Title Nine, Zoning Code, Article V, Use Regulations, is hereby amended at Chapter 911 Primary Uses as follows:

911.04.A.11 Cemetery

Sufficient on-site roadways ~~and parking areas~~ shall be provided within Cemeteries to accommodate peak traffic demands.

911.04.A.12 Child Care (Limited and General)

Child Care (Limited and General) shall be subject to the health and safety, site, and transportation standards outlined in Title 55 of the Pennsylvania Code. In addition, the following standards shall apply:

(a) In the GI District

Child Care uses shall be subject to the following standards in the GI District:

(1) Child Care uses shall be located and designed so as to protect children from any external impacts of industrial operations in the vicinity;

(2) The proposed use shall be subject to the Site Plan Review procedures of Sec. 922.04;

(3) Parking, if provided, and access shall be provided in such a way as to protect users from any external impacts of traffic in the vicinity; and

(4) The Approving Body shall determine that the proposed location of such use will not create detrimental impacts for children attending such facility, taking into consideration surrounding industries, hazardous conditions, traffic generation and hours of operation.

(b) In the UI, RIV-MU and RIV-IMU Districts

Child Care uses shall be subject to the following standards in the UI, RIV-MU and RIV-IMU Districts:

(1) The proposed use shall be subject to the Site Plan Review procedures of Sec. 922.04;

(2) Child Care uses shall be located and designed so as to protect children from any external impacts of industrial operations in the vicinity; and

(3) Parking, if provided, and access shall be provided in such a way as to protect users from any external impacts of traffic in the vicinity.

(c) In EMI Districts

Child Care uses shall be subject to the following standards:

(1) Outdoor play areas shall be sufficiently enclosed and screened from the street such that children are protected from vehicular traffic, and that neighboring properties are screened in order to maximize external impacts of the play areas;

~~(2) Parking shall be provided in location and manner that allows for all parking to be located outside of residential districts; and~~ Transportation demand generated by the facility shall be managed in accordance with 914.10 to prevent any potential detrimental impacts on residential districts; and

(3) The proposed use shall be subject to the site plan review procedures of Section 922.04.

Section 15. The Pittsburgh Code, Title Nine, Zoning Code, Article V, Use Regulations, is hereby amended at Chapter 911 Primary Uses as follows:

911.04.A.14 Community Center (Limited and General)

(a) Community Center (Limited)

(1) In all Residential, Grandview Public Realm, and RIV-RM Districts, R-MU Community Center (Limited) uses shall be subject to the following standards:

~~(i) Potential detrimental impacts of traffic and parking shall be addressed, taking into consideration the needs of events which may occur on site;~~ Transportation demand generated by the facility shall be managed in accordance with 914.10 to prevent any potential detrimental impacts on surrounding neighborhood;

(ii) All activities conducted on the premises of the Community Center shall be noncommercial and nonprofit;

(iii) The Approving Body shall determine that the Community Center use will not be detrimental impacts to the neighborhood, taking into consideration the physical relationship of the proposed use to the surrounding structures, the probable hours of operation, social activities to be conducted and the number of people using the premises at any one (1) time; and

(iv) The Residential Compatibility Standards of Chapter 916 shall apply.

(2) In NDO District

Community Center (Limited) uses shall be subject to the following standards:

~~(i) Potential detrimental impacts of traffic and parking shall be addressed, taking into consideration the needs of events which may occur on site;~~ Transportation demand

generated by the facility shall be managed in accordance with 914.10 to prevent any potential detrimental impacts on surrounding neighborhood;

(ii) All activities conducted on the premises of the Community Center shall be noncommercial and nonprofit; and

(iii) The Residential Compatibility Standards of Chapter 916 shall apply.

(3) In all UI and EMI Districts

Community Center (Limited and General uses shall be subject to the following standards:

(i) The proposed use shall be subject to the Site Plan Review Procedures of Section 922.04; and

~~(ii) Parking and access shall be provided in such a way as to protect users from any external impacts of traffic in the vicinity.~~ Transportation demand generated by the facility shall be managed in accordance with 914.10 to prevent any potential detrimental impacts on surrounding neighborhood;

(b) Community Center (General)

(1) In NDO Districts

Community Center (General) uses shall be subject to the following standards:

~~(i) Potential detrimental impacts of traffic and parking shall be addressed, taking into consideration the needs of events which may occur on site;~~ Transportation demand generated by the facility shall be managed in accordance with 914.10 to prevent any potential detrimental impacts on surrounding neighborhood;

(ii) All activities conducted on the premises of the Community Center shall be noncommercial and nonprofit;

(iii) The Approving Body shall determine that the Community Center use will not be detrimental impacts to the neighborhood, taking into consideration the physical relationship of the proposed use to the surrounding structures, the probable hours of operation, social activities to be conducted and the number of people using the premises at any one (1) time; and

(iv) The Residential Compatibility Standards of Chapter 916 shall apply.

(2) In P and Grandview Public Realm Districts

Community Center (General) uses in the P and Grandview Public Realm Districts shall be subject to the following standards:

~~(i) Potential detrimental impacts of traffic and parking shall be addressed, taking into account the needs of events which may occur on site;~~ Transportation demand generated by the facility shall be managed in accordance with 914.10 to prevent any potential detrimental impacts on surrounding neighborhood;

(ii) All activities conducted on the premises of the Community Center shall be noncommercial and nonprofit;

(iii) The Approving Body shall determine that the Community Center use will not create

detrimental impacts to the neighborhood, taking into consideration the physical relationship of the proposed use to the surrounding structures, the probable hours of operation, social activities to be conducted, and the number of people using the premises at any one (1) time; and

(iv) The Residential Compatibility Standards of Chapter 916 shall apply.

(3) In EMI Districts

Community Center (General) uses shall be subject to the following standards:

(i) The proposed use shall be subject to the Site Plan Review procedures of Section 922.04;

~~(ii) Parking shall be provided in a location and manner that allows for all parking to be located outside of residential areas~~. Transportation demand generated by the facility shall be managed in accordance with 914.10 to prevent any potential detrimental impacts on surrounding neighborhood.

(4) In RIV Districts and R-MU

Community Center (General) uses shall be subject to the following standards:

~~(i) Potential detrimental impacts of traffic and parking shall be addressed, taking into consideration the needs of events which may occur on site; Potential detrimental impacts of traffic and parking shall be addressed, taking into account the needs of events which may occur~~ on site; Transportation demand generated by the facility shall be managed in accordance with 914.10 to prevent any potential detrimental impacts on surrounding neighborhood; and

(ii) The Approving Body shall determine that the Community Center use will not create detrimental impacts to the neighborhood, taking into consideration the physical relationship of the proposed use to the surrounding structures, the probable hours of operation, social activities to be conducted and the number of people using the premises at any one (1) time.

Section 16. The Pittsburgh Code, Title Nine, Zoning Code, Article V, Use Regulations, is hereby amended at Chapter 911 Primary Uses as follows:

911.04.A.18 Cultural Service (Limited)

(a) In Residential and RIV-RM Districts

Cultural Service (Limited) uses shall be subject to the following standards in residential districts:

~~(1) Parking demand shall be addressed in a manner which does not interfere with parking spaces required for surrounding residential uses;~~ Transportation demand generated by the facility shall be managed in accordance with 914.10 to prevent any potential detrimental impacts on surrounding residential uses;

(2) All activities conducted on the premises of the Cultural Service shall be noncommercial and nonprofit;

(3) The Approving Body shall determine that the such use will not create detrimental impacts on the neighborhood, taking into consideration the physical relationship of the proposed use to

the surrounding structures, the probable hours of operation, social activities to be conducted and the number of people using the premises at any one (1) time; and

(4) The Residential Compatibility Standards of Chapter 916 shall apply.

(b) In the P District

Cultural Service (Limited) uses shall be subject to the following standards in the P District:

~~(1) Potential detrimental impacts of traffic and parking shall be addressed, taking into consideration the needs of events which may occur on site;~~ Transportation demand generated by the facility shall be managed in accordance with 914.10 to prevent any potential detrimental impacts on surrounding neighborhood;

(2) All activities conducted on the premises of the Cultural Service shall be noncommercial and nonprofit; and

(3) All facilities shall be designed to be compatible with the surrounding landscape, such that the minimum possible grading will be required and the minimum disturbance and removal of existing vegetation will be required.

(c) In NDO Districts

Cultural Service (Limited) uses shall be subject to the following standards:

~~(1) Parking demand shall be addressed in a manner which does not interfere with parking spaces required for surrounding residential uses; and~~ Transportation demand generated by the facility shall be managed in accordance with 914.10 to prevent any potential detrimental impacts on surrounding residential uses;

(2) All activities conducted on the premises of the cultural service shall be noncommercial and nonprofit; and

(3) The proposed use shall be subject to the Site Plan Review procedures of Section 922.04.

(d) In EMI Districts

(1) The proposed use shall be in compliance with an approved Institutional Master Plan; and

(2) The proposed use shall be subject to the Project Development Plan procedures of Section 922.10

911.04.A.19 Cultural Service (General)

(a) In NDI and LNC Districts

Cultural Service (General) uses shall be subject to the following standards in the NDI and LNC Districts:

(1) Cultural Service (General) uses shall be controlled in such a manner as to offer reasonable protection to the neighborhood against possible detrimental impacts, taking into consideration the physical relationship to surrounding properties, the hours of operation and access to the site;

(2) The design of the structure shall follow the development standards for commercial uses in the LNC and NDI Districts; and

~~(3) Parking demand shall be addressed so as to meet parking needs for both normal and event~~

~~use, and to discourage parking on nearby residential streets.~~ Transportation demand generated by the facility shall be managed in accordance with 914.10 to prevent any potential detrimental impacts on surrounding residential uses.

(b) In the P District

Cultural Service (General) uses shall be subject to the following standards in the P District:

~~(1) Potential detrimental impacts of traffic and parking shall be addressed, taking into consideration the needs of events which may occur on site;~~ Transportation demand generated by the facility shall be managed in accordance with 914.10 to prevent any potential detrimental impacts on surrounding neighborhood;

(2) All activities conducted on the premises of the Cultural Service shall be noncommercial and nonprofit; and

(3) All facilities shall be designed to be compatible with the surrounding landscape, such that the minimum possible grading will be required and the minimum disturbance and removal of existing vegetation will be required.

(c) In the GI District

Cultural Service (General) uses shall be subject to the following standards in the GI District:

~~(1) Parking facilities shall be designed and located to avoid disruption of industrial facilities in the area;~~

~~(2) Parking demand shall be addressed so as to meet parking needs for both normal and event use, and to discourage parking on nearby streets;~~

(1) Transportation demand generated by the facility shall be managed in accordance with 914.10 to prevent any potential detrimental impacts on surrounding neighborhoods;

(2) A traffic study in a form approved by the Zoning Administrator shall be submitted with the application, and shall address parking and traffic impacts of the proposed development. The transportation study shall illustrate that the proposed development will not create traffic congestion on the surrounding streets; and

~~(4) Parking and access shall be provided in such a way as to protect users from any external impacts of industry in the vicinity; and~~

~~(5)~~ (3) The Approving Body shall determine that the proposed use will not create detrimental impacts on the surrounding district, taking into consideration potential traffic generation, pedestrian access, and hours of operation.

(d) In EMI Districts

Cultural Service (General) uses shall be subject to the following standards:

(1) The Approving Body shall determine that such use will not create detrimental impacts on the surrounding properties, taking into consideration the probable traffic generation, the physical relationship of the proposed use and structure to surrounding uses and structures, the emission of noise or glaring light, and proposed accessory uses, such as meeting facilities;

(2) The proposed use shall be in compliance with an approved Institutional Master Plan;

(3) The proposed use shall be subject to the Project Development Plan procedures of Section 922.10.

911.04.A.20 Educational Classroom Space (Limited)

(a) In non-EMI Districts

Educational Classroom Space (Limited) shall be subject to the following standards:

(1) The design of the structure shall follow the district's development standards for commercial uses;

(2) The height and bulk of the proposed structure shall be designated as to minimize blocking of views from adjacent residential properties;

(3) Access to the facility shall be addressed in a manner which emphasizes the use of public transit to the facility, and clearly meets the peak demands of the facility in a manner which does not require the use of parking spaces on residential streets; ~~and~~

(4) The approving body shall determine that such use will not create detrimental impacts on the surrounding properties, taking into consideration probable traffic generation, the physical relationship of the proposed use and structure to surrounding uses and structures, the probable hours of operation, the availability of multiple modes of transportation, ~~the impacts of parking in surrounding residential uses,~~ and the size and bulk of the building;

(5) Transportation demand generated by the facility shall be managed in accordance with 914.10 to prevent any potential detrimental impacts on surrounding neighborhood; and

~~(5)~~ (6) The proposed use shall be subject to the Site Plan Review procedures of Section 922.04.

(b) In EMI districts

Educational Classroom Space (Limited) shall be subject to the following standards:

(1) The proposed use shall be in compliance with an approved Institutional Master Plan; and

(2) The proposed use shall be subject to the Project Development Plan procedures of Section 922.10.

911.04.A.21 Educational Classroom Space (General)

(a) In UNC Districts

Educational Classroom Space (General) shall be subject to the following standards:

(1) The design of the structure shall follow the district's development standards for commercial uses;

(2) The height and bulk of the proposed structure shall be designed as to minimize blocking of views from adjacent residential properties;

(3) Access to the facility shall be addressed in a manner which emphasizes the use of public transit to the facility, and clearly meets the peak demands of the facility in a manner which does not require the use of parking spaces on residential streets; and

(4) The Approving Body shall determine that such use will not create detrimental impacts on the surrounding properties, taking into consideration probable traffic generation, the physical relationship of the proposed use and structure to surrounding uses and structures, the probable hours of operation, the availability of multiple modes of transportation, ~~the impacts of parking in surrounding residential uses,~~ and the size and bulk of the building; and

(5) Transportation demand generated by the facility shall be managed in accordance with 914.10 to prevent any potential detrimental impacts on surrounding neighborhood.

(b) In EMI Districts

Educational Classroom Space (Limited) shall be subject to the following standards:

(1) The proposed use shall be in compliance with an approved Institutional Master Plan; and

(2) The proposed use shall be subject to the Project Development Plan procedures of Section 922.10.

(c) In RIV Districts

Educational Classroom Space (General) shall be subject to the following standards:

(1) Access to the facility shall be addressed in a manner which emphasizes the use of public transit to the facility, and clearly meets the peak demands of the facility in a manner which does not require the use of parking spaces on residential streets; and

(2) The Approving Body shall determine that such use will not create detrimental impacts on the surrounding properties, taking into consideration probable traffic generation, the physical relationship of the proposed use and structure to surrounding uses and structures, the probable hours of operation, the availability of multiple modes of transportation, ~~the impacts of parking in surrounding residential uses,~~ and the size and bulk of the building.; and

(3) Transportation demand generated by the facility shall be managed in accordance with 914.10 to prevent any potential detrimental impacts on surrounding neighborhood.

(d) In the UC-E and UC-MU, Educational Classroom Space (Limited and General) shall be subject to the following standards:

(1) Access to the facility shall be addressed in a manner which emphasizes the use of public transit to the facility, and clearly meets the peak demands of the facility in a manner which does not require the use of parking spaces on residential streets;

(2) The Approving Body shall determine that such use will not create detrimental impacts on the surrounding properties, taking into consideration probable traffic generation, the physical relationship of the proposed use and structure to surrounding uses and structures, the probable hours of operation, the availability of multiple modes of transportation, ~~the impacts of parking in surrounding residential uses,~~ and the size and bulk of the building.;

(3) Transportation demand generated by the facility shall be managed in accordance with 914.10 to prevent any potential detrimental impacts on surrounding neighborhood; and

(4) Educational Classroom Space shall be permitted only in mixed use structures where there is at least one (1) additional primary use. The two (2) or more primary uses may be under

common ownership or control, but it is not required. The Educational Classroom Space shall be less than fifty
(50) percent of the Gross Floor Area in the mixed-use structure in the UC-MU. The Educational Classroom Space shall be less than eighty (80) percent of the Gross Floor Area in the mixed-use structure in the UC-E. For purposes of this calculation, shared spaces between the primary uses shall be excluded from the calculation of Gross Floor Area.

Section 17. The Pittsburgh Code, Title Nine, Zoning Code, Article V, Use Regulations, is hereby amended at Chapter 911 Primary Uses as follows:

911.04.A.33 Hotel/Motel (Limited)

(a) In LNC, UNC and NDI Districts

Hotel/Motel (Limited) uses shall be subject to the following standards in the LNC, UNC and NDI Districts:

(1) The design of the structure shall follow the development standards for commercial uses in the UNC and NDI Districts; and

~~(2) Parking demand shall be addressed so as to meet parking needs for both normal and event use, and to discourage parking on nearby residential streets.~~ Transportation demand generated by the facility shall be managed in accordance with 914.10 to prevent any potential detrimental impacts on surrounding residential uses.

(b) In EMI Districts

Hotel/Motel (Limited) uses shall be subject to the following standards:

(1) The approving body shall determine that such use will not create detrimental impacts on the surrounding properties, taking into consideration the probable traffic generation, the availability of multiple modes of transportation, ~~parking needs,~~ generation of noise and the hours of operation; ~~and~~

(2) Transportation demand generated by the facility shall be managed in accordance with 914.10 to prevent any potential detrimental impacts on surrounding neighborhood; and

(3) The proposed use shall be subject to the Project Development Plan procedures of Section 922.10.

(c) In RIV Districts and UC-E, UC-MU, and R-MU,

Hotel/Motel (Limited) uses shall be subject to the following standards:

(1) The approving body shall determine that such use will not create detrimental impacts on the surrounding properties, taking into consideration the probable traffic generation, parking needs, generation of noise and the hours of operation; and

~~(2) Parking demand shall be addressed so as to meet parking needs for both normal and event use, and to discourage parking on nearby residential streets.~~ Transportation demand generated by the facility shall be managed in accordance with 914.10 to prevent any potential detrimental impacts on surrounding residential uses.

911.04.A.34 Hotel/Motel (General)

(a) In UNC, LNC and NDI Districts

Hotel/Motel (General) uses shall be subject to the following standards:

(1) The design of the structure shall follow the development standards for commercial uses in the UNC Districts;

~~(2) Parking demand shall be addressed so as to meet parking needs for both normal and event use, and to discourage parking on nearby residential streets;~~ Transportation demand generated by the facility shall be managed in accordance with 914.10 to prevent any potential detrimental impacts on surrounding residential uses;

(3) The Approving Body shall determine that such use will not create detrimental impacts on the surrounding properties, taking into consideration the probable traffic generation, the physical relationship of the proposed use and structure to surrounding uses and structures, the emission of noise or glaring light, and proposed accessory uses such as restaurants and meeting facilities; and

(4) The Approving Body shall request a recommendation from the Planning Director on the Planning aspects of the proposed use and structures.

(b) In EMI Districts

Hotel/Motel (General) uses shall be subject to the following standards:

(1) The height and bulk of the proposed structure shall be designed as to minimize blocking of views from adjacent residential properties;

(2) The approving body shall determine that such use will not create detrimental impacts on the surrounding properties, taking into consideration the probable traffic generation, the availability of multiple modes of transportation, ~~parking needs,~~ generation of noise and the hours of operation; and

(3) The proposed use shall be subject to the Project Development Plan procedures of Section 922.10.

(c) In the RIV-MU District, UC-E, UC-MU, and R-MU,

Hotel/Motel (General) uses shall be subject to the following standards:

~~(1) Parking demand shall be addressed so as to meet parking needs for both normal and event use, and to discourage parking on nearby residential streets; and~~ Transportation demand generated by the facility shall be managed in accordance with 914.10 to prevent any potential detrimental impacts on surrounding residential uses; and

(2) The Approving Body shall determine that such use will not create detrimental impacts on the surrounding properties, taking into consideration the probable traffic generation, the physical relationship of the proposed use and structure to surrounding uses and structures, the emission of noise or glaring light, and proposed accessory uses such as restaurants and meeting facilities.

Section 18. The Pittsburgh Code, Title Nine, Zoning Code, Article V, Use Regulations, is hereby amended at Chapter 911 Primary Uses as follows:

911.04.A.41 Multi-Suite Residential

Multi-Suite Residential (Limited and General) uses shall be subject to the following standards:

(a) Multi-Suite Residential (Limited)

(1) In the R3 and Grandview Public Realm Districts

a. The Approving Body shall determine that the proposed use will not create detrimental impacts on the surrounding properties, taking into consideration probable traffic generation, the physical relationship of the proposed use and structure to surrounding uses and structures, the hours of operation, the availability of multiple modes of transportation, ~~the impacts of parking on surrounding residential uses,~~ and the size and bulk of the building;

b. The building shall be designed to be in keeping with the residential character of the surrounding area; and

c. Certain special features shall be permitted, usually associated with shared living arrangements, such as common dining facilities, shared laundry facilities, lounge areas and similar or related facilities.

(2) In the NDO District

a. The proposed use shall be subject to the Site Plan Review procedures of Section 922.04;

b. The building shall be designed to be in keeping with the character of the surrounding area; and

c. Certain special features shall be permitted, usually associated with shared living arrangements, such as common dining facilities, shared laundry facilities, lounge areas and similar or related facilities.

(3) In EMI Districts

a. The building shall be designed to be in keeping with the character of the surrounding area;

b. Certain special features shall be permitted, usually associated with shared living arrangements, such as common dining facilities, shared laundry facilities, lounge areas and similar or related facilities;

c. The Approving Body shall determine that the proposed use will not create detrimental impacts on the surrounding properties, taking into consideration probable traffic generation, the physical relationship of the proposed use and structure to surrounding uses and structures, the hours of operation, the availability of multiple modes of transportation, ~~the impacts of parking on~~ surrounding residential uses, and the size and bulk of the building; and

d. The proposed use shall be subject to the Project Development Plan procedures of Section 922.10.

(b) Multi-Suite Residential (General)

(1) In the R3, RM, RIV-RM, and LNC Districts

a. The building shall be designed to be in keeping with the character of the surrounding area;

b. Certain special features shall be permitted, usually associated with shared living arrangements, such as common dining facilities, shared laundry facilities, lounge areas and similar or related facilities; and

c. The Approving Body shall determine that the proposed use will not create detrimental impacts on the surrounding properties, taking into consideration probable traffic generation, the physical relationship of the proposed use and structure to surrounding uses and structures, the hours of operation, the availability of multiple modes of transportation, ~~the impacts of parking on~~ ~~surrounding residential uses,~~ and the size and bulk of the building.

(2) In the NDO and UI Districts

a. The proposed use shall be subject to Site Plan Review;

b. The building shall be designed to be in keeping with the character of the surrounding area; and

c. Certain special features shall be permitted, usually associated with shared living arrangements, such as common dining facilities, shared laundry facilities, lounge areas and similar or related facilities.

(3) In Grandview Public Realm Districts

a. The Approving Body shall determine that the proposed use will not create detrimental impacts on the surrounding properties, taking into consideration probable traffic generation, the physical relationship of the proposed use and structure to surrounding uses and structures, the hours of operation, the availability of multiple modes of transportation, ~~the impacts of parking on~~ ~~surrounding residential uses,~~ and the size and bulk of the building;

b. The building shall be designed to be in keeping with the residential character of the surrounding area; and

c. Certain special features shall be permitted, usually associated with shared living arrangements, such as common dining facilities, shared laundry facilities, lounge areas and similar or related facilities.

(4) In EMI Districts

a. The building shall be designed to be in keeping with the character of the surrounding area;

b. Certain special features shall be permitted, usually associated with shared living arrangements, such as common dining facilities, shared laundry facilities, lounge areas and similar or related facilities;

c. The Approving Body shall determine that the proposed use will not create detrimental impacts on the surrounding properties, taking into consideration probable traffic generation, the physical relationship of the proposed use and structure to surrounding uses and structures, the hours of operation, the availability of multiple modes of transportation, ~~the impacts of parking on~~ ~~surrounding residential uses,~~ and the size and bulk of the building; and

d. The proposed use shall be subject to the Project Development Plan procedures of Section 922.10.

(5) In the UC-E, UC-MU and R-MU

~~a. Parking shall be provided in accordance with the Parking Demand Analysis provisions of~~ Section 914.02.B; and

b. a. The Approving Body shall determine that the proposed use will not create detrimental impacts on the surrounding properties, taking into consideration probable traffic generation, the physical relationship of the proposed use and structure to surrounding uses and structures, the hours of operation, the availability of multiple modes of transportation, ~~the impacts of parking on~~ surrounding residential uses, and the size and bulk of the building.

(6) In the UC-E District

Multi-Suite Residential uses shall meet one (1) of the following standards in the UC-E District:

(a) All residential ~~shall~~ units shall meet the requirements of ~~907.04.A.6~~ 902.05.A.5 and shall otherwise follow the processes and procedures of 90~~7~~2.04, excluding ~~907.04.A.5~~ 902.05.A.4 Applicability and ~~907.04.A.7~~ 902.05.A.6 Off- Site Inclusionary Standards. One hundred (100) percent of the units shall be affordable and shall be located on site; or

(b) Residential housing shall be less than fifty (50) percent of the Gross Floor Area in a mixed- use structure. For purposes of this calculation, shared spaces between residential uses and commercial shall be excluded from the calculation of Gross Floor Area.

911.04.A.42 Office (Limited) in the NDO and EMI Districts:

(a) In NDO District

Office (Limited) uses shall be subject to the following standards:

(1) The proposed use shall be subject to the Residential Compatibility Standards of Chapter 916;

(2) The proposed use shall be subject to the Landscaping and Screening Standards of Chapter 918;

(3) The design of any structure in an NDO District used for non-residential purposes that does not occupy a structure originally designed as a residence shall be of a scale and character that is consistent with the scale and character of adjacent residential neighborhoods;

(4) The gross floor area of any non-residential development, or any portion of any development which is non-residential in use shall not exceed eight thousand (8,000) square feet;

~~(5) Parking shall be provided in a location and manner that allows for all parking required by the facility, and all traffic created by the facility, to be located outside of residential districts; and~~ Transportation demand generated by the facility shall be managed in accordance with 914.10 to prevent any potential detrimental impacts on surrounding residential uses; and

(6) For Office (General) uses, the Approving Body shall determine that such use will not create detrimental impacts on the surrounding properties, taking into consideration the probable traffic generation, the availability of multiple modes of transportation, parking needs, noise generation, and the hours of operation.

(b) In EMI Districts

Office (limited) uses shall be subject to the following standards:

(1) The proposed use shall be in compliance with an approved Institutional Master Plan; and

(2) The proposed use shall be subject to the Project Development Plan procedures of Section 922.10.

911.04.A.43 Office (General) in LNC, NDI, GI, NDO, RIV and EMI Districts

(a) In the LNC, RIV and NDI Districts Office (General) uses shall be subject to the following standards:

(1) The approving body shall determine that the proposed use will not create detrimental impacts on the surrounding properties and district, taking into consideration the probable traffic generation, hours of operation, noise and light.

(b) In the GI District Office (General) uses shall be subject to the following standards:

(1) The use shall be allowed only in buildings that were in existence prior to the effective date specified by the provisions of Section 901.05 and only when located above the ground floor.

(c) In the NDO District Office (General) uses shall be subject to the following standards:

(1) The proposed use shall be subject to the Residential Compatibility Standards of Chapter 916;

(2) The proposed use shall be subject to the Landscaping and Screening Standards of Chapter 918;

(3) The design of any structure in an NDO District used for non-residential purposes that does not occupy a structure originally designed as a residence shall be of a scale and character that is consistent with the scale and character of adjacent residential neighborhoods;

~~(4) Parking shall be provided in a location and manner that allows for all parking requirements by the facility, and all traffic created by the facility, to be located outside of residential districts; and~~ Transportation demand generated by the facility shall be managed in accordance with 914.10 to prevent any potential detrimental impacts on surrounding residential uses; and

(5) For office (General) uses, the approving body shall determine that such use will not create detrimental impacts on the surrounding properties taking into consideration the probable traffic generation, the availability of multiple modes of transportation~~, parking needs,~~ noise generation, and the hours of operation.

(d) In EMI Districts

Office (General) uses shall be subject to the following standards:

(1) The proposed use shall be in compliance with an approved Institutional Master Plan;

(2) The proposed use shall be subject to the Project Development Plan procedures of Section 922.10.

911.04.A.44 Parking, Commercial (Limited)

(a) In NDI, UNC, and GI Districts:

Parking, Commercial (limited) uses shall be subject to the following standards in NDI, UNC, and GI districts:

(1) The use shall be located to minimize disruption to pedestrian movements; and

(2) Curb cuts shall be located a minimum of sixty (60) feet from an intersection the point of intersection of curb lines of two (2) or more intersecting streets and sixty (60) feet from other curb cuts unless granted relief by the Zoning Administrator in accordance with 914.09.A.1.

(b) In LNC and RIV Districts:

Parking, Commercial (limited) uses shall be subject to the following standards in the LNC and RIV Districts:

(1) The use shall be located to minimize disruption to pedestrian movements;

(2) Curb cuts shall be located a minimum of sixty (60) feet from an intersection the point of intersection of curb lines of 2 or more intersecting streets and sixty (60) feet from other curb cuts unless granted relief by the Zoning Administrator in accordance with 914.09.A.1; and

(3) The approving body shall determine that such use will not create detrimental impacts on the surrounding properties, taking into consideration the probable traffic generation, hours of operation, noise, and light.

(c) In EMI districts

Parking, Commercial (Limited) uses shall be subject to the following standards:

(1) The use shall be located to minimize disruption to pedestrian movements;

(2) Curb cuts shall be located a minimum of sixty (60) feet from ~~an intersection~~ the point of intersection of curb lines of two (2) or more intersecting streets and sixty (60) feet from other curb cuts unless granted relief by the Zoning Administrator in accordance with 914.09.A.1;

(3) The proposed use shall be in compliance with an approved Institutional Master Plan; and

(4) The proposed use shall be subject to the Project Development Plan procedures of Section 922.10.

911.04.A.45 Parking, Commercial (General)

(a) In all non-EMI Districts

Parking, Commercial (General) uses shall be subject to the following standards:

~~(1)~~ The use shall be located to minimize disruption to pedestrian movements;

~~(2)~~ Curb cuts shall be located a minimum of sixty (60) feet from ~~an intersection~~ the point of intersection of curb lines of two (2) or more intersecting streets and sixty (60) feet from other curb cuts unless granted relief by the Zoning Administrator in accordance with

914.09.A.1; and

~~(3)~~ The Approving Body shall determine that such use will not create detrimental impacts on the surrounding properties, taking into consideration the probable traffic generation, hours of operation, noise, and light.

~~(4)~~ The lot containing the Parking, Commercial (General) use shall not be located within one thousand (1,000) feet from a Gaming Enterprise as measured from the lot lines of the subject properties.

(b) In EMI districts

Parking, Commercial (Limited) uses shall be subject to the following standards:

~~(1)~~ The use shall be located to minimize disruption to pedestrian movements;

~~(2)~~ Curb cuts shall be located a minimum of sixty (60) feet from ~~an intersection~~ the point of intersection of curb lines of two (2) or more intersecting streets and sixty (60) feet from other curb cuts unless granted relief by the Zoning Administrator in accordance with 914.09.A.1;

~~(3)~~ The proposed use shall be in compliance with an approved Institutional Master Plan; and

~~(4)~~ The proposed use shall be subject to the Project Development Plan procedures of Section 922.10.

~~(c) In RIV-NS District~~

~~Parking, Commercial (Limited) uses shall be subject to the following standards:~~

~~(1) Commercial parking lots shall be permitted only when they also serve as accessory or shared parking for on-site or adjacent uses at different peak parking demands.~~

Section 19. The Pittsburgh Code, Title Nine, Zoning Code, Article V, Use Regulations, is hereby amended at Chapter 911 Primary Uses as follows:

911.04.A.47 Recreation and Entertainment, Indoor (General)

(a) In UNC Districts

Recreation and Entertainment, Indoor (General) uses shall be subject to the following standards in the UNC District:

(1) The design of the structure shall follow the development standards for commercial uses in the UNC Districts; and

(2) ~~Parking demand shall be addressed so as to meet parking needs for both normal and event use, and to discourage parking on nearby residential streets.~~ Transportation demand generated by the facility shall be managed in accordance with 914.10 to prevent any potential detrimental impacts on surrounding residential uses.

(b) In P Districts

Recreation and Entertainment, Outdoor (General) uses shall be subject to the following standards in the P District:

(1) ~~Parking demand shall be addressed so as to meet parking needs for both normal and event use, and to discourage parking on nearby residential streets; and~~ Transportation demand generated by the facility shall be managed in accordance with 914.10 to prevent any potential detrimental impacts on surrounding residential uses; and

(2) All facilities shall be designed to be compatible with the surrounding landscape, such that the minimum possible grading will be required and the minimum disturbance and removal of existing vegetation will be required.

(c) In LNC and NDI Districts

(1) The design of the structure shall follow the development standards for commercial uses in the LNC and NDI Districts; and

(2) ~~Parking demand shall be addressed so as to meet parking needs for both normal and event use, and to discourage parking on nearby residential streets.~~ Transportation demand generated by the facility shall be managed in accordance with 914.10 to prevent any potential detrimental impacts on surrounding residential uses.

(d) In GI Districts

Recreation and Entertainment, Indoor (General) uses shall be subject to the following standards in the GI District:

(1) Parking facilities shall be designed and located to avoid disruption of industrial facilities in the area;

(2) ~~Parking demand shall be addressed so as to meet parking needs for both normal and event use, and to discourage parking on nearby streets;~~ Transportation demand generated by the facility shall be managed in accordance with 914.10 to prevent any potential detrimental impacts on surrounding residential uses;

(3) A traffic study in a form approved by the Zoning Administrator shall be submitted with the application, and shall address ~~parking and~~ traffic impacts of the proposed development. The transportation study shall illustrate that the proposed development will not create traffic congestion on the surrounding streets; and

(4) The Approving Body shall determine that the proposed use will not create detrimental impacts on the surrounding district, taking into consideration potential traffic generation, pedestrian access, and hours of operation.

(e) In EMI Districts

Recreational and Entertainment, Indoor (General) uses shall be subject to the following standards:

(1) The approving body shall determine that such use will not create detrimental impacts on the surrounding properties, taking into consideration the probable traffic generation, the availability of multiple modes of transportation, ~~parking needs,~~ and generation of noise and the hours of operation;

(2) A traffic study, in a form approved by the Zoning Administrator, shall be submitted with the application, and shall address ~~parking and~~ traffic impacts of the development;

(3) The height and bulk of the proposed structure shall be designed as to minimize

blocking of views from adjacent residential properties;

(4) The proposed use shall be in compliance with an approved Institutional Master Plan; and

(5) The proposed use shall be subject to the Project Development Plan procedures of Section 922.10.

(f) In UC-E and UC-MU Districts

Recreation and Entertainment, Indoor (General) uses shall be subject to the following standards:

~~(1)Parking demand shall be addressed so as to meet parking needs for both normal and event use, and to discourage parking on nearby residential streets; and~~

~~(2)~~ (1) The Approving Body shall determine that the proposed use will not create detrimental impacts on the surrounding district, taking into consideration potential traffic generation, pedestrian access, and hours of operation.

911.04.A.48 Recreation and Entertainment, Indoor (Limited)

(a) In the P District

Recreation and Entertainment, Indoor (Limited) uses shall be subject to the following standards in the P District:

~~(1) Parking demand shall be addressed so as to meet parking needs for both normal and event use, and to discourage parking on nearby residential streets; and~~ Transportation demand generated by the facility shall be managed in accordance with 914.10 to prevent any potential detrimental impacts on surrounding residential uses; and

(2) All facilities shall be designed to be compatible with the surrounding landscape, such that the minimum possible grading will be required and the minimum disturbance and removal of existing vegetation will be required.

(b) In EMI Districts

Recreational and Entertainment, Indoor (Limited) uses shall be subject to the following standards:

(1) The proposed use shall be in compliance with an approved Institutional Master Plan; and

(2) The proposed use shall be subject to the Project Development Plan procedures of Section 922.10.

911.04.A.49 Recreation and Entertainment, Outdoor (Limited)

(a) In LNC, NDI and UNC Districts

Recreation and Entertainment, Outdoor (Limited) uses shall be subject to the following standards in the LNC, NDI and UNC Districts:

(1) All facilities shall be designed to be compatible with the surrounding landscape, such that the minimum possible grading will be required and the minimum disturbance and removal of existing vegetation will be required;

~~(2) Parking demand shall be addressed so as to meet parking needs for both normal and event use, and to discourage parking on nearby residential streets; and~~ Transportation demand

generated by the facility shall be managed in accordance with 914.10 to prevent any potential detrimental impacts on surrounding residential uses; and

(3) Any enclosure, such as fences and walls, shall be designed to be compatible with surrounding structures and shall not include the use of barbed or razor wire.

(b) In P Districts

Recreation and Entertainment, Outdoor (Limited) uses shall be subject to the following standards in the P District:

(1) The design of the structure shall follow the development standards for commercial uses in the UNC District;

~~(2) Parking demand shall be addressed so as to meet parking needs for both normal and event use, and to discourage parking on nearby residential streets;~~ Transportation demand generated by the facility shall be managed in accordance with 914.10 to prevent any potential detrimental impacts on surrounding residential uses;

(3) Any enclosure, such as fences and walls, shall be designed to be compatible with surrounding structures and shall not include the use of barbed or razor wire; and

(4) All facilities shall be designed to be compatible with the surrounding landscape, such that the minimum possible grading will be required and the minimum disturbance and removal of existing vegetation will be required.

(c) In EMI Districts

Recreational and Entertainment, Outdoor (Limited) uses shall be subject to the following standards:

(1) The proposed use shall be in compliance with an approved Institutional Master Plan; and

(2) The proposed use shall be subject to the Project Development Plan procedures of Section 922.10.

911.04.A.50 Recreation and Entertainment, Outdoor (General)

(a) In GI District

Recreation and Entertainment, Outdoor (General) uses shall be subject to the following standards in the GI District:

(1) Parking facilities shall be designed and located to avoid disruption of industrial facilities in the area; and

~~(2) Parking demand shall be addressed so as to meet parking needs for both normal and event use, and to discourage parking on nearby residential streets;~~ Transportation demand generated by the facility shall be managed in accordance with 914.10 to prevent any potential detrimental impacts on surrounding residential uses;

(3) A traffic study in a form approved by the Zoning Administrator shall be submitted with the application, and shall address ~~parking and~~ traffic impacts of the proposed development. The transportation study shall illustrate that the proposed development will not create traffic congestion on the surrounding streets; and

(4) The Approving Body shall determine that the proposed use will not create detrimental impacts on the surrounding district, taking into consideration potential traffic generation, pedestrian access, and hours of operation.

(b) In P District

Recreation and Entertainment, Outdoor (General) uses shall be subject to the following standards in the P District:

(1) The design of the structure shall follow the development standards for commercial uses in the UNC District;

~~(2) Parking demand shall be addressed so as to meet parking needs for both normal and event use, and to discourage parking on nearby residential streets;~~ Transportation demand generated by the facility shall be managed in accordance with 914.10 to prevent any potential detrimental impacts on surrounding residential uses;

(3) Any enclosure, such as fences and walls, shall be designed to be compatible with surrounding structures and shall not include the use of barbed or razor wire; and

(4) All facilities shall be designed to be compatible with the surrounding landscape, such that the minimum possible grading will be required and the minimum disturbance and removal of existing vegetation will be required.

(c) In EMI Districts

Recreational and Entertainment, Outdoor (General) uses shall be subject to the following standards:

(1) The approving body shall determine that such use will not create detrimental impacts on the surrounding properties, taking into consideration the probable traffic generation, ~~parking needs,~~ generation of noise and the hours of operation;

~~(2) Parking demand shall be addressed so as to meet parking needs for both normal and event use, and to discourage parking on nearby residential streets;~~ Transportation demand generated by the facility shall be managed in accordance with 914.10 to prevent any potential detrimental impacts on surrounding residential uses;

(3) Any enclosure, such as fences and walls, shall be designed to be compatible with surrounding structures and shall not include the use of barbed or razor wire;

(4) The proposed use shall be in compliance with an approved Institutional Master Plan; and

(5) The proposed use shall be subject to the Project Development Plan procedures of Section 922.10.

Section 20. The Pittsburgh Code, Title Nine, Zoning Code, Article V, Use Regulations, is hereby amended at Chapter 911 Primary Uses as follows:

911.04.A.53 Religious Assembly (Limited and General)

Religious Assembly (Limited and General) uses shall be subject to the following standards:

~~(a) Parking demand shall be addressed so as to meet parking needs for both normal and event use, and to discourage parking on nearby residential streets;~~ Transportation demand generated by

the facility shall be managed in accordance with 914.10 to prevent any potential detrimental impacts on surrounding residential uses;

(b) In residential zoning districts, the Approving Body shall request a report and recommendation from the Planning Director on the planning aspects of the application; and

(c) Where recommended by the Planning Director, the Approving Body may modify the height, yard, open space, area, and parking requirements;

(d) The Residential Compatibility Standards of Chapter 916 shall apply; and

(e) The Approving Body shall determine that such use will not create detrimental impacts on the surrounding properties, taking into consideration the probable traffic generation~~, parking needs,~~ the availability of multiple modes of transportation, and hours of operation.

Section 21. The Pittsburgh Code, Title Nine, Zoning Code, Article V, Use Regulations, is hereby amended at Chapter 911 Primary Uses as follows:

911.04.A.56 Restaurant (Limited)

(a) In GI District

Restaurant (Limited) uses shall be subject to the following standards in the GI District:

(1) Parking shall be located in such a way as to avoid conflicts with industrial operations; and

(2) The Approving Body shall determine that such use will not create detrimental impacts on surrounding properties, taking into consideration the probable traffic generation~~, parking needs~~ the availability of multiple modes of transportation, and hours of operation.

(b) In P District

Restaurant (Limited) uses shall be subject to the following standards in the P District:

(1) The use shall be located in a building existing on February 26, 1999;

(2) Parking for the use shall not be provided;

(3) The Approving Body shall determine that such use will not create detrimental impacts on the surrounding properties, taking into consideration the probable generation of traffic and the location of the use; and

(4) All facilities shall be designed to be compatible with the surrounding landscape, such that the minimum possible grading will be required and the minimum disturbance and removal of existing vegetation will be required.

(c) In EMI Districts

Restaurant (Limited) uses shall be subject to the following:

~~(1) Parking facilities and access shall be designed and located to clearly meet the demand of the facility in a way which does not interfere with parking spaces required for surrounding residential uses; and~~ Transportation demand generated by the facility shall be managed in accordance with
914.10 to prevent any potential detrimental impacts on surrounding residential uses; and

(2) The proposed use shall be subject to the Site Plan Review procedures of Section 922.04.

911.04.A.57 Restaurant (General)

(a) In LNC, NDI, UNC, RIV, UC-MU and EMI Districts

Restaurant (General) uses shall be subject to the following standards in the LNC, NDI and UNC Districts: ~~Parking facilities and access shall be designed and located to clearly meet the demand of the facility in a way which does not interfere with parking spaces required for surrounding residential uses;~~ Transportation demand generated by the facility shall be managed in accordance with 914.10 to prevent any potential detrimental impacts on surrounding residential uses;

(1) Off-site impacts of the use, which are directly attributed to activities occurring on-site, shall be controlled to avoid conflicts with surrounding residential use; and

(2) The proposed use shall be subject to the Site Plan Review procedures of Section 922.04.

(b) In GI District

Restaurant (General) uses shall be subject to the following standards in the GI District:

~~(1) Parking shall be located in such a way as~~ Transportation demand generated by the facility shall be managed in accordance with 914.10 to avoid conflicts with industrial operations; and

(2) The Approving Body shall determine that such use will not create detrimental impacts on surrounding properties, taking into consideration the probable traffic generation, ~~parking needs~~ the availability of multiple modes of transportation, and hours of operation.

(c) In P District

Restaurant (General) uses shall be subject to the following standards in the P District:

(1) The use shall be located in a building existing on February 26, 1999;

(2) Parking for the use shall not be provided;

(3) The Approving Body shall determine that such use will not create detrimental impacts on the surrounding properties, taking into consideration the probable generation of traffic and the location of the use; and

(4) All facilities shall be designed to be compatible with the surrounding landscape, such that the minimum possible grading will be required and the minimum disturbance and removal of existing vegetation will be required.

Section 22. The Pittsburgh Code, Title Nine, Zoning Code, Article V, Use Regulations, is hereby amended at Chapter 911 Primary Uses as follows:

911.04.A.59 Retail Sales and Services (General)

(a) In GI Districts

Retail Sales and Service (General) uses shall be subject to the following standards in GI District:

(1) Off-street parking, loading and hours of operation shall be conducted in a manner that

does not interfere with any industrial operations in the vicinity.

(b) In UNC, LNC, and NDI Districts

Retail Sales and Service (General) shall be subject to the following standards in the UNC, LNC, and NDI Districts:

(1) ~~Parking facilities and access shall be designed and located to clearly meet the demand of the facility in a way which does not interfere with parking spaces required for surrounding residential uses~~ Transportation demand generated by the facility shall be managed in accordance with 914.10 to prevent any potential detrimental impacts on surrounding residential uses.

~~(c) In LNC and NDI Districts~~

~~Retail Sales and Services (General) shall be subject to the following standards in the LNC and NDI Districts:~~

~~(1) Parking and access facilities shall be designed and located to clearly meet the demand of the facility in a away that does not interfere with parking spaces required for the surrounding residential uses.~~

~~(d) In EMI Districts~~

~~Retail Sales and Services (General) shall be subject to the following standards:~~

~~(1) The approving body shall determine that such use will not create detrimental impacts on the surrounding properties, taking into consideration the probable traffic generation, parking needs,generation of noise and the hours of operation;~~

~~(2) A traffic study, in a form approved by the Zoning Administrator, shall be submitted with the application, and shall address parking and traffic impacts of the development;~~

~~(3) Off-street parking, loading and hours of operation shall be conducted in a manner that does not interfere with institutional operations in the vicinity;~~

~~(4) The proposed use shall be subject to the Site Plan Review procedures of Section 922.04.~~

Section 23. The Pittsburgh Code, Title Nine, Zoning Code, Article V, Use Regulations, is hereby amended at Chapter 911 Primary Uses as follows:

911.04.A.61 Safety Service

Safety Service uses shall be subject to the following standards:

(a) In all Districts

Curb cuts, driveways, and other vehicular areas shall be designed and located to minimize detrimental impacts on the surrounding residential properties.

(b) In Residential Districts

Safety Service uses shall be subject to the following standards in all residential zoning districts:

(1) Height, yard, and area requirements shall be those of the residential district in which the facility is located; and

(2) The Approving Body shall determine that such use will not create detrimental impacts on the surrounding properties, taking into consideration the probable traffic generation, ~~parking needs,~~ truck routes, on-site storage, and noise generation.

(c) In LNC, NDI and UNC Districts

Safety Service uses shall be subject to the following standards in the LNC, NDI and UNC Districts:

(1) Curb cuts and vehicular drives shall be designed according to the Parking Area Location and Design Standards of Sec. 914.~~09~~ 07; and

(2) The design of the structure shall follow the development standards for commercial uses in the UNC District.

(d) In NDO and P Districts

(1) The Approving Body shall determine that such use will not create detrimental impacts on the surrounding properties, taking into consideration the probable traffic generation, ~~parking needs,~~ truck routes, on-site storage, and noise generation.

(2) A maximum of fifty (50) percent of the lot shall contain impervious surfaces.

(3) Parking and driveway area shall be screened from view from adjacent streets and residential uses.

(e) In EMI Districts

Safety Service uses shall be subject to the following standards:

(1) The approving body shall determine that such use will not create detrimental impacts on the surrounding properties, taking into consideration the probable traffic generation, ~~parking needs,~~ generation of noise and the hours of operation;

(2) The proposed use shall be subject to the Site Plan Review procedures of Section 922.04.

Section 24. The Pittsburgh Code, Title Nine, Zoning Code, Article V, Use Regulations, is hereby amended at Chapter 911 Primary Uses as follows:

911.04.A.63 School, Elementary or Secondary (Limited)

School, Elementary or Secondary (Limited) uses shall be subject the following standards:

(a) In Residential and Grandview Public Realm Districts

(1) The Residential Compatibility Standards of Chapter 916 shall apply;

(2) A traffic study in a form approved by the Zoning Administrator shall be submitted with the application, and shall address parking and traffic impacts of the proposed development;

~~(3) Parking and a~~Access shall be provided in such a way as to protect children from any external impacts of traffic in the vicinity; and

(4) The Approving Body shall determine that such use will not create detrimental impacts on surrounding properties, taking in to consideration probable traffic generation, ~~parking needs,~~

the availability of multiple modes of transportation, the size and bulk of the building, and the impacts of uses other than normal hours.

(b) In NDO, LNC, NDI, UI, RIV, UC-E, UC-MU, R-MU and EMI Districts.

(1) The Approving Body shall determine that such use shall not create detrimental impacts on surrounding properties, taking into consideration probable traffic generation, ~~parking needs,~~ the availability of multiple modes of transportation, the size and bulk of the building, and the impacts of uses outside of normal hours of operation;

(2) A traffic study in a form approved by the Zoning Administrator shall be submitted with the application, and shall address ~~parking and~~ traffic impacts of the proposed development; and

~~(3) Parking and a~~Access shall be provided in such a way as to protect children from any external impacts of traffic in the vicinity.

(c) In UNC and HC Districts

(1) Site Plan Review shall be required; and

(2) Parking and aAccess shall be provided in such a way as to protect children from any external impacts of traffic in the vicinity.

911.04.A.64 School, Elementary or Secondary (General)

School, Elementary or Secondary (General) uses shall be subject the following standards:

(a) In Residential and Grandview Public Realm Districts

(1) The Residential Compatibility Standards of Chapter 916 shall apply;

(2) A traffic study in a form approved by the Zoning Administrator shall be submitted with the application, and shall address parking and traffic impacts of the proposed development;

~~(3) Parking and a~~Access shall be provided in such a way as to protect children from any external impacts of traffic in the vicinity; and

(4) The Approving Body shall determine that such use will not create detrimental impacts on surrounding properties, taking in to consideration probable traffic generation, ~~parking needs,~~ the availability of multiple modes of transportation, the size and bulk of the building, and the impacts of uses other than normal hours.

(b) In NDO, LNC, RIV UC-E, UC-MU, R-MU and EMI Districts.

(1) The Approving Body shall determine that such use will not create detrimental impacts on surrounding properties, taking into consideration probable traffic generation, ~~parking needs,~~ the availability of multiple modes of transportation, the size and bulk of the building, and the impacts of uses outside of normal hours of operation;

(2) A traffic study in a form approved by the Zoning Administrator shall be submitted with the application, and shall address ~~parking and~~ traffic impacts of the proposed development;

~~(3) Parking and a~~Access shall be provided in such a way as to protect children from any external impacts of traffic in the vicinity.

(c) In NDI and UI Districts

(1) The Approving Body shall determine that such use will not create detrimental impacts on surrounding properties, taking into consideration probable traffic generation, ~~parking needs,~~ the availability of multiple modes of transportation, the size and bulk of the building, and the impacts of uses outside of normal hours of operation;

(2) A traffic study in a form approved by the Zoning Administrator shall be submitted with the application, and shall address ~~parking and~~ traffic impacts of the proposed development; and

~~(3) Parking and a~~Access shall be provided in such a way as to protect students from any external impacts of traffic in the vicinity.

(d) In the UNC and HC Districts

(1) Site Plan Review shall be required;

(2) Parking and aAccess shall be provided in such a way as to protect children from any external impacts of traffic in the vicinity.

Section 25. The Pittsburgh Code, Title Nine, Zoning Code, Article V, Use Regulations, is hereby amended at Chapter 911 Primary Uses as follows:

911.04.A.73 Vehicle/Equipment Repair (Limited)

(a) In the LNC, NDI and UNC Districts

Vehicle/Equipment Repair (Limited) uses shall be subject to the following standards in the LNC, NDI and UNC Districts:

(1) The use shall be located within a completely enclosed structure;

(2) The facility shall be designed according to the development standards for commercial uses in the district;

(3) The building housing such use shall be located at least thirty (30) feet from any right-of-way line and at least sixty (60) feet from any lot in a residential zoning district; and

(4) Access to such use shall not be provided from a primary commercial frontage where access from the rear is possible.

(5) In the NDI and UNC Districts, the Approving Body shall determine that such use will not create detrimental impacts on the surrounding properties, taking into consideration the probable traffic generation, ~~parking,~~ pedestrian safety, noise and hours of operation.

(b) In the GT, DR and EMI Districts.

Vehicle/Equipment Repair (Limited) uses shall be subject to the following standards in the GT and DR Districts:

(1) The uses shall be only permitted as accessory uses within a larger structure;

(2) Vehicular access shall not be provided from the primary commercial frontage where rear vehicular access is possible; and

(3) All repair and service work to vehicles shall be conducted within an entirely enclosed structure, and no such work shall be conducted in a location which is visible from adjacent properties or a right-of-way.

(c) In RIV Districts.

Vehicle/Equipment Repair (Limited) uses shall be subject to the following standards:

(1) The uses shall be only permitted as accessory uses within a larger structure;

(2) All repair and service work to vehicles shall be conducted within an entirely enclosed structure, and no such work shall be conducted in a location which is visible from adjacent properties or a right-of-way.

911.04.A.74 Vehicle/Equipment Repair (General)

Vehicle/Equipment Repair (General) uses shall be subject to the following standards:

(a) The building housing such use shall be located at least thirty (30) feet from any right-of-way line and at least sixty (60) feet from any lot in a residential zoning district;

(b) Access to such facility shall not be provided from a primary commercial frontage where access from the rear is possible; and

(c) In the NDI and UNC Districts, the Approving Body shall determine that such use will not create detrimental impacts on the surrounding properties, taking into consideration the probable traffic generation, ~~parking,~~ pedestrian safety, noise and hours of operation.

911.04.A.75 Vehicle/Equipment Sales (Limited)

(a) In LNC, UNC, UI, RIV and NDI Districts

Vehicle/Equipment Sales (Limited) shall be subject to the following standards in the LNC, UNC, UI, RIV and NDI Districts:

(1) The facility shall be designed according to the development standards for commercial uses in the district; and

(2) Curb cuts and vehicular drives shall be designed according to the Parking Area Location and Design Standards of Section 914.~~09~~ 07; and

(3) The public right-of-way shall not be used for the storage of vehicles; and

(4) Except as provided for in other regulations, no unregistered or uninspected motor vehicle shall be parked, kept or stored on any premises, and no vehicle shall at any time be in a state of major disassembly, disrepaired, or in the process of being stripped or dismantled; and

(5) The Landscaping and Screening Standards of Chapter 918 shall apply regardless of the number of parking stalls provided.

(b) The definition of vehicle/equipment sales, Section 911.02, includes the retail, wholesale, or rental of motorized vehicle, etc.

911.04.A.76 Vehicle/Equipment Sales (General)

Vehicle/Equipment Sales (General) shall be subject to the following standards:

(a) In the UNC, RIV and NDI Districts

(1) The facility shall be designed according to the development standards for commercial uses in the district;

(2) Curb cuts and vehicular drives shall be designed according to the Parking Area Location and Design Standards of Sec. 914.09;

(3) The Approving Body shall determine that such use will not create detrimental impacts on surrounding properties, taking into consideration probable ~~parking needs,~~ traffic generation, and the design and location of areas for parking and maneuvering of vehicles.

(b) In the HC District

(1) The facility shall be designed according to the development standards for commercial uses in the district;

(2) Curb cuts and vehicular drives shall be designed in accordance to the Parking Area Location and Design Standards of Sec. 914.09 07;

(3) The Landscaping and Screening Standards of Chapter 918 shall apply; and

(4) Site Plan Review shall be required.

(c) In the UI District

(1) The facility shall be designed according to the development standards for commercial uses in the district;

(2) Curb cuts and vehicular drives shall be designed in accordance to the Parking Area Location and Design Standards of Sec. 914.~~09~~ 07;

(3) The Landscaping and Screening Standards of Chapter 918 shall apply; and

(4) Site Plan Review shall be required.

911.04.A.77 Vocational School (Limited and General)

(a) Vocational School (Limited) uses shall be subject to the following standards:

(1) In EMI Districts

(i) The proposed use shall be in compliance with an approved Institutional Master Plan; and

(ii) The proposed use shall be subject to the Project Development Plan Procedures of Section 922.10.

(b) Vocational School (General) uses shall be subject to the following standards:

(1) In all Districts

The facility shall be designed according to the development standards for commercial uses in the district.

(2) In NDI, RIV Districts, UC-E, and UC-MU,

(i) The approving body shall determine that such use will not create detrimental impacts on surrounding properties, taking into consideration probable traffic generation, the availability of

multiple modes of transportation, ~~parking needs,~~ the size and bulk of the building, and the impacts of uses outside of normal hours of operation; ~~and~~

(ii) A traffic study in a form approved by the Zoning Administrator shall be submitted with the application, and shall address ~~parking and~~ traffic impacts of the proposed development.; and

(iii) Transportation demand generated by the facility shall be managed in accordance with 914.10 to prevent any potential detrimental impacts on surrounding residential uses.

(3) In EMI Districts

Vocational School (General) uses shall be subject to the following standards:

(i) The proposed use shall be in compliance with an approved Institutional Master Plan; ~~and~~

(ii) Transportation demand generated by the facility shall be managed in accordance with 914.10 to prevent any potential detrimental impacts on surrounding residential uses; and

(iii) The proposed use shall be subject to the Project Development Plan procedures of Section 922.10.

Section 26. The Pittsburgh Code, Title Nine, Zoning Code, Article V, Use Regulations, is hereby amended at Chapter 911 Primary Uses as follows:

911.04.A.80 Nursery, Retail (Limited and General)

Nursery, Retail (Limited and General) uses shall be subject to the following standards:

(a) Nursery, Retail (Limited) in P districts

~~(1) Parking shall be provided in a location and manner that allows for all parking required by the facility, and all traffic created by the facility, to be located outside of residential districts;~~ Transportation demand generated by the facility shall be managed in accordance with 914.10 to prevent any potential detrimental impacts on surrounding residential uses; and

(2) All facilities shall be designed to be compatible with the surrounding landscape, such that the minimum possible grading will be required and the minimum disturbance and removal of existing vegetation will be required.

(b) Nursery, Retail (Limited) in NDO and LNC districts

The proposed use shall be subject to the Landscaping and Screening Standards of Chapter 918.

(c) Nursery, Retail (General) in NDI District

(1) The proposed use shall be subject to the Site Plan Review procedures of Sec. 922.04;

(2) The proposed use shall be subject to the Landscaping and Screening Standards of Chapter 918; and

~~(3) Parking demand shall be addressed so as to meet parking needs and to discourage parking on nearby streets.~~ Transportation demand generated by the facility shall be managed in accordance with 914.10 to prevent any potential detrimental impacts on surrounding residential uses.

(d) Nursery, Retail (General) in GI Districts

(1) The proposed use shall be subject to the Site Plan Review procedures of Sec. 922.04; and

~~(2) Parking demand shall be addressed so as to meet parking needs and to discourage parking on~~ nearby streets. Transportation demand generated by the facility shall be managed in accordance with 914.10 to prevent any potential detrimental impacts on surrounding residential uses.

(e) Nursery, Retail (General) in RIV Districts

~~(1) Parking demand shall be addressed so as to meet parking needs and to discourage parking on~~ nearby streets. Transportation demand generated by the facility shall be managed in accordance with 914.10 to prevent any potential detrimental impacts on surrounding residential uses.

911.04.A.81 Medical Office (Limited and General)

(1) In the NDO District

Medical Office (Limited) uses shall be subject to the following standards in the NDO District:

(i) The proposed use shall be subject to the Residential Compatibility Standards of Chapter 916; and

(ii) The proposed use shall be subject to the Landscaping and Screening Standards of Chapter 918.

(iii) The design of any structure in an NDO District used for non-residential purposes that does not occupy a structure originally designed as a residence shall be of a scale and character that is consistent with the scale and character of adjacent residential neighborhoods;

~~(iv) Parking shall be provided in a location and manner that allows for all parking required by the facility, and all traffic created by the facility, to be located outside of residential districts;~~ Transportation demand generated by the facility shall be managed in accordance with 914.10 to prevent any potential detrimental impacts on surrounding residential uses;

(v) For Medical Office (General) uses, the Approving Body shall determine that the site is sufficiently separated from property zoned Residential and that the additional size of the use will not create a detrimental impact on such properties through consideration of the additional traffic impacts caused by additional height and density, the impacts on views from such residential properties, and the impacts of the bulk of the buildings on such residential properties and noise generation and the hours of operation; and

(vi) A traffic study in a form approved by the Zoning Administrator shall be submitted with the application, and shall address ~~parking and~~ traffic impacts of the proposed development. The transportation study shall illustrate that the proposed development will not create traffic congestion on the surrounding streets.~~, and that residential streets in the vicinity shall not be used for parking for the proposed development.~~

(2) In the LNC and NDI Districts

Medical Office (Limited) uses shall be subject to the following standards in the LNC and NDI Districts:

(i) The proposed use shall be subject to the Site Plan Review procedures of Sec. 922.04.

(3) In GI Districts

Medical Office (Limited) uses shall be subject to the following standards in the GI District:

(i) The proposed use shall be subject to the Site Plan Review procedures of Sec. 922.04; and

(ii) The proposed use shall be located within an existing structure.

(4) In EMI Districts

Medical Office (Limited and General) uses shall be subject to the following standards:

(i) The proposed use shall be in compliance with an approved Institutional Master Plan; and

(ii) The proposed use shall be subject to the Project Development Plan procedures of Section 922.10.

Section 27. The Pittsburgh Code, Title Nine, Zoning Code, Article V, Use Regulations, is hereby amended at Chapter 911 Primary Uses as follows:

911.04.A.83 Grocery Store (General)

(a) In GI Districts

Grocery Store (General) uses shall be subject to the following standards in GI District:

(1) Off street parking, loading and hours of operation shall be conducted in a manner that does not interfere with any industrial operations in the vicinity.

(b) In UNC, UI and EMI Districts.

Grocery Store (General) shall be subject to the following standards in the UNC and UI Districts:

~~(1) Parking facilities and access shall be designed and located to clearly meet the demand of the facility in a way that does not interfere with parking spaces required for surrounding residential uses; and~~ Transportation demand generated by the facility shall be managed in accordance with 914.10 to prevent any potential detrimental impacts on surrounding residential uses; and

(2) The proposed use shall be subject to the Site Plan Review Procedures of Sec. 922.04.

(c) In LNC and NDI Districts

Grocery Store (General) shall be subject to the following standards in the LNC and NDI Districts:

~~(1) Parking facilities and access shall be designed and located to clearly meet the demand of the facility in a way that does not interfere with parking spaces required for surrounding residential uses; and~~ Transportation demand generated by the facility shall be managed in accordance with
914.10 to prevent any potential detrimental impacts on surrounding residential uses;

(2) The Approving Body shall determine that such use will not create detrimental impacts on surrounding residential properties, considering, among others, the following factors: the adequacy of ~~parking and~~ loading facilities, trash storage, traffic generation, pedestrian access, exhaust odors, vibration, dust, noise, outdoor lighting, signage, and landscape features.

(3) The Approving Body shall determine that such use will not create detrimental impacts on surrounding properties considering the compatibility of the proposed uses with the surrounding and adjacent uses.

Section 28. The Pittsburgh Code, Title Nine, Zoning Code, Article V, Use Regulations, is hereby amended in Chapter 911.04, Use Standards, as follows:

911.04.A.85 Multi-Unit Residential

(a) In the UI District

Multi-Unit Residential uses in the UI District shall be subject to the following standards:

(1) All residential units may be limited to floors above the ground floor of the building when residential uses are not desirable on the ground floor.

(b) In the EMI District

Multi-Unit Residential uses shall be subject to the following standards in the EMI District:

(1) The proposed use shall be subject to the Residential Compatibility Standards of Chapter 916; and

(2) The Approving Body shall determine that the proposed use will not create detrimental impacts on surrounding residential properties, taking into consideration the compatibility of the proposed use with the surrounding and adjacent properties; the generation of light and noise from the proposed use; parking, loading and access.

(c) In the UC-E District

Multi-Unit Residential uses shall meet one (1) of the following standards in the UC-E District:

(1) All the residential ~~shall~~ units shall meet the requirements of ~~907.04.A.6~~
902.05.A.5 and shall otherwise follow the processes and procedures of 90~~7~~2.04, excluding ~~907.04.A.5~~
902.05.A.4 Applicability and ~~907.04.A.7 and~~ 902.05.A.6 Off-Site Inclusionary Standards. One hundred (100) percent of the units shall be affordable and shall be located on site. Or

(2) Residential housing shall be less than fifty (50) percent of the Gross Floor Area in a mixed-use structure. For purposes of this calculation, shared spaces between residential uses and commercial shall be excluded from the calculation of Gross Floor Area.

Section 29. The Pittsburgh Code, Title Nine, Zoning Code, Article V, Use Regulations, is hereby amended at Chapter 911 Primary Uses as follows:

911.04.A.88 Club: Social, Fraternal, Athletic, Business or Professional

~~(i) Amount of required parking stalls shall be determined by the approving body based on the nature of the operation and the availability of off-site parking facilities.~~ Transportation demand generated by the facility shall be managed in accordance with 914.10 to prevent any potential detrimental impacts on surrounding residential uses; and

(ii) The approving body shall determine that such use will not create detrimental impacts on the surrounding properties, taking into consideration the probable traffic generation~~, parking needs,~~ and hours and days of operation.

911.04.A.89 Hospital

(a) In EMI Districts

Hospital uses shall be subject to the following standards:

(1) The design shall include devices which prevent noise and emissions associated with the use of the facility from being impacted on other properties in the vicinity;

(2) The height and bulk of the proposed structure shall be designed as to minimize blocking of views from adjacent residential properties;

~~(3) Parking shall be provided in a location and manner that allows for all parking to be located outside of residential districts;~~ Transportation demand generated by the facility shall be managed in accordance with 914.10 to prevent any potential detrimental impacts on surrounding residential uses;

(4) The proposed use shall be in compliance with an approved Institutional Master Plan; and

(5) The proposed use shall be subject to the Project Development Plan procedures of Section 922.10.

(b) In RM, LNC, UNC, HC, and UI Districts

Hospital uses shall be subject to the following standards:

(1) The buildable area of the lot shall not be nearer than thirty (30) feet to any lot line which is not a street line;

(2) The permissible height regulations of the district wherein such use is located shall apply, and may be exceeded provided any portion of a structure above the permissible height shall not exceed the height of inward-sloping planes; beginning at the rear lot line other than street line at the average grade level of the ground along such rear lot line opposite the structure concerned, and having a rise of one (1) foot for each two (2) feet of horizontal dimensions; and, beginning at the respective side lot lines other than street lines at the average grade level of the ground along such lot lines opposite the structure concerned, and having a rise of one (1)

foot for each two (2) feet of horizontal dimension;

(3) The total bulk of buildings upon the zoning lot shall not exceed the cubical contents of a prism having a base equal to the buildable area of the lot and height of eighty-five (85) feet;

(4) Automobile parking area may encroach on yards not abutting a street, but not closer to a lot line than fifteen (15) feet, provided it shall be visually screened from adjoining property in accordance with the screening provisions of Section 918.03.

(5) An Institutional Master Plan must be approved by Planning Commission prior to the review of the Conditional Use Application.

Section 30. The Pittsburgh Code, Title Nine, Zoning Code, Article V, Use Regulations, is hereby amended at Chapter 911 Primary Uses as follows:

911.04.A.94 Custodial Care Facility

Custodial Care Facilities shall be subject to following standards in all districts:

(a) An Operation Management Plan for the proposed use shall be submitted as part of the application for the Occupancy Permit. The Plan shall describe programs of operation and management including: Uses and activities that will occur in conjunction with the use, hours of operation of non-residential services, noise control, traffic generation, and methods to minimize loitering in the vicinity of the facility. In addition, a Communications Plan that describes how the provider will communicate with local community, neighborhood, and business organizations, and with adjacent neighbors on a regular basis, and how any community issues or concerns will be addressed. The dwelling unit shall have one (1) primary means of ingress/egress, a single outside mail box, single utility connections (except for telephone, computer and cable service), and common eating/cooking areas;

(b) The use shall not require alteration to the exterior structure except where otherwise permitted for single-family residential dwellings or where required under health/safety codes;

(c) Lot area shall be provided at the rate of five thousand (5,000) square feet plus five hundred (500) square feet for each sleeping room in excess of three (3) beds. Every unit of two (2) beds, or fraction hereof, in a sleeping room shall be counted as a separate sleeping room. The Board may reduce this provision when the use has been in existence since May 10, 1958;

(d) Supervision shall be provided in accord with the regulations of the certifying agency(ies) by at least one (1) responsible non-client adult available on the premises on a twenty-four-hour a day basis while any of the clients are on premises; and

(e) Sleeping rooms shall not be located in any basement or cellar and shall comply with all applicable life-safety codes; and.

~~(g) On-site parking facilities shall be provided at the ratio of one (1) stall for every two (2) full-time staff members and an additional stall for every three (3) non-staff members who are eligible and permitted by the operator to operate a motor vehicle.~~

Section 31. The Pittsburgh Code, Title Nine, Zoning Code, Article V, Use Regulations, is hereby amended at Chapter 911 Primary Uses as follows:

911.04.A.96 Bank or Financial Institutional (Limited and General)

~~(a) In EMI Districts~~ Reserved

~~Bank or Financial Institution (Limited and General) uses shall be subject to the following standards:~~

~~(1) Parking demand shall be addressed so as to meet parking needs and to discourage parking in residential districts;~~

~~(2)~~ ~~(1)~~ ~~The proposed use shall be subject to the Site Plan Review procedures of Section 922.04.~~

Section 32. The Pittsburgh Code, Title Nine, Zoning Code, Article V, Use Regulations, is hereby amended at Chapter 912 Accessory Uses and Structures as follows:

912.01. - Accessory Uses and Structures in General.

Primary uses specified as permitted by-right, Administrator Exceptions, Special Exceptions or Conditional Uses shall be deemed to include accessory uses, activities and structures. An accessory use or structure must:

A. Be subordinate to and serve the primary use or structure;

B. Be subordinate in area, extent and purpose to the primary use or structure served;

C. Contribute to the comfort, convenience or necessity of occupants of the primary use or structure served; and

D. Be located on the same zoning lot and in the same zoning district as the primary use, except as otherwise provided in subsection 912.03(7).

Accessory uses and activities shall be subject to the same regulations as apply to primary uses in each district, except as otherwise provided in these regulations.

912.02. - Residential Accessory Uses and Structures.

The following accessory uses, activities and structures shall be permitted by-right in Residential and H Districts:

(1) Dumpsters;

(2) Fences, walls and retaining walls, provided that the finished side faces adjacent property;

(3) Gardens;

(4) Garages used exclusively for the parking of non-commercial automobiles, or for the temporary keeping of small pleasure boats with trailer mounts therefore, other wheeled vehicles designed to be drawn by passenger automobiles, normal household paraphernalia and the like;

(5) Carports and off-street parking areas;

(6) Gates and guard houses;

(7) Storm shelter and fallout shelters;

(8) Home occupations, subject to § 912.05;

(9) Playhouses, patios, cabanas, porches, decks, gazebos and incidental household storage buildings;

(10) Radio and television receiving antennas and support structures, including satellite dishes less than thirty-two (32) inches in diameter;

(11) Swimming pools and other recreational and play facilities for the use of residents;

(12) Solar energy systems;

(13) Extensive Green Roofs as described in § 912.04.I;

(14) Intensive Green Roofs as described in § 912.04.J;

(15) HVAC and similar equipment; ~~and~~

(16) Parking carousels or other mechanized parking lift systems in RM Zoning Districts subject to 912.09; and

(17) Other necessary and customary uses determined by the Zoning Administrator to be appropriate, incidental and subordinate to the primary use on the lot.

912.03. - Nonresidential Accessory Uses and Structures.

The following accessory uses, activities and structures shall be permitted by-right in nonresidential districts:

(1) Dumpsters;

(2) Dwelling units, other than mobile homes, for security or maintenance personnel;

(3) Fences, walls and retaining walls, provided that the finished side faces adjacent property and/or public rights-of-way;

(4) Gates and guard houses;

(5) Cafeterias, dining halls and similar food services when operated primarily for the convenience of employees, residents, clients, or visitors to the primary use;

(6) Gift shops, news stands and similar commercial activities operated primarily for the convenience of employees, residents, clients, or visitors to the primary use;

(7) Parking garages and off-street parking areas, subject to the following conditions:

a) Accessory off-street parking areas, either structured or surface parking, are permitted to be located on a separate zoning lot and in a different zoning district from the primary use.

b) Accessory off-street parking for a non-residential use shall not be located in a residential zoning district except if the use is located in the same district.

c) On-Site and Off-Site surface parking is prohibited in the GT, RIV-NS, UC-E, and UC-MU, except as provided in 904.08.B.2.

d) Parking carousels or other mechanized parking lift systems subject to 912.09.

(8) Radio and television receiving antennas and support structures, including satellite dishes less than thirty-two (32) inches in diameter;

(9) Solar energy systems;

(10) Extensive Green Roofs as described in § 912.04.I;

(11) Intensive Green Roofs as described in § 912.04.J;

(12) HVAC and similar equipment; and

(13) Other necessary and customary uses determined by the Zoning Administrator to be appropriate, incidental and subordinate to the primary use on the lot.

Section 33. The Pittsburgh Code, Title Nine, Zoning Code, Article V, Use Regulations, is hereby amended at Chapter 912, Accessory Uses and Structures, as follows:

912.04. - Accessory Use and Structure Development and Operational Standards.

The following standards shall apply to all accessory uses and structures unless otherwise specifically provided. For exceptions to these standards, see Chapter 925.

912.04.A Front Setback

Accessory structures shall comply with the front setback and front yard standards that apply to primary uses, except as allowed in 925.06.A or as an Administrator's Exception in 925.06.G. (See Sec. 925.06)

912.04.B Rear Setback

Accessory structures and uses shall not be required to comply with the rear setback standard that applies to principal uses, except as allowed in 925.06.A or as an Administrator's Exception in 925.06.G. Accessory structures and uses shall be set back at least five (5) feet from the rear lot line when the rear lot line is not adjacent to a way. Accessory structures and uses may be set back at least two (2) feet from the rear lot line when the rear lot line is adjacent to a way.

912.04.C Side Setbacks

Accessory structures and uses shall comply with the side setback standards that apply to primary uses, and shall not be permitted in the side yard under the Contextual Setback provisions of Sec. 925.06.C, but shall be permitted in the side yard in accordance 925.06.A or with the Administrator Exception provisions of Sec. 925.06.G.

912.04.D Setbacks from Easements

No accessory structure shall be located on any platted or recorded easement, or over any known utility.

912.04.E Height

No accessory structure shall exceed fifteen (15) feet or one (1) story in height in a residential zoning district or twenty (20) feet in height in a nonresidential zoning district., except that a single story above a garage may be permitted to a total height no greater than 30 feet.

Section 34. The Pittsburgh Code, Title Nine, Zoning Code, Article V, Use Regulations, is hereby amended at Chapter 912 Accessory Uses and Structures as follows:

912.04. L Parking Pads and Garages for Residential Uses with Fewer than five (5) Spaces.

Parking pads and garages for residential uses that do not exceed four (4) spaces and do not comply with the setback standards for accessory uses and structures may be approved subject to the standards below.

(1) Parking pads and garages shall be permitted in setbacks in side and rear yards;

(2) In exterior side yards, parking pads and garages shall not be closer to the street than the primary structure;

~~(3) In front yards, parking pads and garages shall be set back five (5) feet from the front of the primary structure~~ Parking pads and garages are prohibited in the front yard and shall be set back five (5) feet behind the front of the primary structure;

(4) Runoff shall be contained on-site and directed away from abutting properties; and

(5) Parking pads shall provide enough area to reasonably accommodate the parking spaces provided, using Section 914.~~09.~~07.H for guidance, and in no case shall be smaller than the minimum standards for compact-size parking stalls. Parking spaces must be provided on-site without encroaching on public rights-of-way or neighboring properties unless legal access has been granted through easements or similar measures.

Section 35. The Pittsburgh Code, Title Nine, Zoning Code, Article V, Use Regulations, is hereby amended at Chapter 912 Accessory Uses and Structures as follows:

912.05. - Home Occupations.

912.05.A Purpose

The home occupation standards of this section are intended to permit the establishment of incidental and accessory home occupation uses while ensuring their compatibility with the character of residential neighborhoods. They are intended to permit residents to engage in home occupations that are compatible with residential uses and to ensure that home occupations do not adversely affect the land use character of residential areas.

912.05.B Standards

The following standards shall apply to Home Occupations except for accessory in-home Child Care for three (3) or few children where the home is the primary residence of the child care provider:

912.05.B.1 Employees

Only individuals who are residents of the dwelling unit may be engaged in the home occupation.

912.05.B.2 Exterior Appearance

There shall be no change in the exterior appearance of the dwelling unit that houses the home occupation, and there shall be no visible evidence of the conduct of a home occupation when viewed from the street right-of- way or from an adjacent lot. This provision shall be interpreted as specifically prohibiting signs (except those required by licensing regulations See Sec. 919.03.L for regulations pertaining to signs and Home Occupations), equipment storage, sales displays and vehicles with more than two (2) axles, unless completely shielded from view of adjacent property.

912.05.B.3 Traffic

A home occupation shall not generate more than six (6) one-way vehicle trips (trip-ends) per twenty-four- hour day.

912.05.B.4 Building Additions and Entrances

No building addition or building entrance visible from the street shall be permitted for the purpose of accommodating a home occupation.

912.05.B.5 Nuisances

No equipment used in conjunction with a home occupation shall cause odor, vibration, noise, electrical interference or fluctuation in line voltage that is perceptible beyond the lot line of the lot upon which the home occupation is conducted. Home occupations shall comply with the Operational Performance Standards of Chapter 917.

~~912.05.B.6 Parking~~

~~Any parking necessary to accommodate a home occupation shall be provided off-street. No required setback or yard area, other than in a pre-existing parking area, may be used to accommodate a home occupation's off- street parking.~~

Section 36. The Pittsburgh Code, Title Nine, Zoning Code, Article V, Use Regulations, is hereby amended at Chapter 912, Accessory Uses and Structures, as follows:

912.08. Accessory Dwelling Unit ~~Overlay District~~.

A. Intent.

It is the intent of this Section to permit the construction and operation of Accessory Dwelling Units, as defined in 912.08.~~D~~B, ~~in certain districts~~ to provide a greater diversity of housing options in the City of Pittsburgh.

~~B. Time Limit.~~

~~An interim Accessory Dwelling Unit Overlay District shall be in effect for twenty-four (24) months from the effective date. The Accessory Dwelling Unit Overlay District may be made permanent prior to the expiration of the interim Accessory Dwelling Unit Overlay District.~~

~~C. Adoption.~~

~~Adoption of both a Preliminary and Permanent Accessory Dwelling Unit Overlay District shall be in accordance with~~

~~the Zoning Map and Text Amendment Procedures of Section 922.05.~~

~~D.~~ B. Special Definitions.

~~1. Accessory Dwelling Unit Overlay District means a district which is geographically coincidental with one (1) or more districts or portions of districts as defined on the Zoning District Map, where Accessory Dwelling Units are permitted subject to the standards of this Chapter of the Zoning Ordinance, on an interim or permanent basis.~~

~~2.~~ 1. Accessory Dwelling Unit means a dwelling unit not greater than ~~800~~ 1,000 square feet in area, which is accessory to a ~~structure with a legally established single dwelling unit~~ primary use. An Accessory Dwelling Unit may be an independent dwelling unit within a primary structure, a detached structure, or a dwelling unit located within an existing accessory structure.

~~E.~~ C. Standards.

~~1. The requirements of this Section shall apply to both interim and permanent Accessory Dwelling Unit Overlay Districts;~~

~~2. No Accessory Dwelling Unit may be leased for a period shorter than thirty (30) days;~~

~~3. No more than one (1) Accessory Dwelling Unit may be located on a zoning lot;~~

~~4. The owner of a property with an Accessory Dwelling Unit must reside on-site;~~

~~5. Accessory Dwelling Unit shall not exceed two (2) stories, or thirty (30) feet in height;~~

~~6. Accessory Dwelling Unit shall be exempt from the minimum lot size and minimum lot size per unit requirements of the underlying zoning district;~~

~~7. Aside from the provisions of Section 912.08.E.5 and Section 912.08.E.6, Accessory Dwelling Units shall comply with the development standards of the underlying zoning district and other applicable requirements of the Code, except for the minimum lot size per unit requirement;~~

~~8. Prior to the issuance of a Certificate of Occupancy for an Accessory Dwelling Unit, the Applicant shall record a deed restriction obliging current and future property owners to maintain compliance with Section 912.08.E and Section 912.08.E.d[4];~~

~~9. Accessory Dwelling Units shall be exempt from the on-site parking requirements of Section 914; and~~

~~10. Accessory Dwelling Units shall only be permitted as accessory to structures with no more than one (1) legally established residential dwelling unit.~~

1. The requirements of this Section shall apply to all Accessory Dwelling Units;

2. Accessory Dwelling Units are permitted to be located on any lot where a primary use is a Residential use, Community Center, or Religious Assembly use as defined in Section 911.02;

3. An Accessory Dwelling Unit shall not exceed 2 stories, or 30 feet in height. The height of an accessory dwelling unit built above a detached garage shall be measured including the height of the garage;

4. Accessory Dwelling Units shall be exempt from the Residential Compatibility

Standards of Section 916;

5. The conversion of an existing garage located within a rear or side yard setback to an Accessory Dwelling Unit shall not require an Administrator's Exception provided that the proposed Accessory Dwelling Unit does not encroach further into the setback;

6. Accessory Dwelling Units built above a garage in a rear or side yard setback shall not require an Administrator's Exception provided that the rear yard abuts a Way.

7. Aside from the provisions of 912.08.C.3, 912.08.C.4, 912.08.C.5, and 912.08.C.6, Accessory Dwelling Units shall comply with the Accessory Use and Structure Development and Operational Standards of 912.04; and

8. For Accessory Dwelling Units that are accessory to a Residential use, the maximum number of Accessory Dwelling Units is 2 per Zoning Lot.

9. For Accessory Dwelling Units that are accessory to a Community Center or Religious Assembly uses, the following additional standards shall apply:

   a. There shall be no maximum number of accessory dwelling units; and

   b. Developments with more than 10 units shall be subject to Site Plan Review in accordance with Section 922.04.

Section 37. The Pittsburgh Code, Title Nine, Zoning Code, Article V, Use Regulations, is hereby amended at Chapter 912 Accessory Uses and Structures creating a new Section 912.09 Parking Carousels and Other Mechanized Parking Lift Systems:

912.09 Parking Carousels and Other Mechanized Parking Lift Systems

912.09.A Standards

1. In Mixed-Use Zoning Districts, Special Purpose Districts, with the exception of Parks and Hillside Districts, and Planning Districts, the parking carousel or other mechanized parking lift system may exceed the maximum height for accessory structures in 912.04.E provided they do not exceed 65 feet or the height of the primary structure, whichever is less.

2. In RM Districts, parking carousels and mechanized parking lift systems may exceed the maximum height for accessory structures in 912.04.E provided they do not exceed 60 feet or the height of the primary structure, whichever is less. They shall not be located within 25 feet of property zoned R1D, R1A, R2, R3, or H.

3. Parking carousels and other mechanized parking lift systems shall be located as to not be visible from any Street, however, the Zoning Administrator may authorize an exception to the location requirement if screened. For structures less than 30 feet, landscaped screening,

consisting primarily of evergreen trees or hedges planted at an initial height and at intervals as deemed sufficient to adequately screen the base of the structure at time of planting. For structures 30 feet or greater, landscaping and/or public art shall be utilized to adequately screen the structure. Screening not consisting solely of landscaping shall be subject to Design Review.

Section 38. The Pittsburgh Code, Title Nine, Zoning Code, Article V, Use Regulations, is hereby amended at Chapter 913 Use Exceptions and Conditions Not Listed in Use Table as follows:

913.02.E. Parking Loading and Access Regulations

~~1. Review and Approval Procedure for Small Facilities (Sec. 914.07.D.1)~~

~~2. Shared Parking (Sec. 914.07.G.1(a))~~

~~3. Valet Parking (Sec. 914.07.G.1(b))~~

~~4.~~ 1. Exceptions to Parking and Loading Area Dimensional Standards (Sec. 914.~~11.B.1~~ 09.A.1)

~~5.~~ 2. Exceptions to Off-Street Loading Schedule (Sec. 914. 11.B.2 09.A.2)

~~6.~~ 3. Shared and Off-Site Loading (Sec. 914.~~11.B.3~~ 09.A.3)

~~7. Exception to Off-Street Parking Requirements for Infill Housing (Sec. 914.11.B.4)~~

913.02.F Other Administrator Exceptions

1. Alternative Compliance to Landscaping and Screening Requirements (Sec. 918.06)
2. Features Allowed Within Setbacks (Sec. 925.06.G)

913.03. - Special Exceptions**.**

The following uses shall be allowed as Special Exceptions in accordance with the Review Procedures of Sec. 922.07.

913.03.A Urban Neighborhood Commercial District

~~1.~~ Special Exception for Height (Sec. 904.04.C.4)

913.03.B Public Realm District

~~1.~~ Height Exception in the Grandview Subdistrict B (Sec. 908.02.G.2(b))

~~2.~~ Height Exception in the Grandview Subdistrict C (Sec. 908.02.G.3(b))

~~3.~~ Special Exceptions in Grandview Public Realm District (Sec. 908.02.H)

~~4.~~ Special Exception for Height in Oakland Subdistrict B/Craig Street (see Section 908.03.D.2(f).

~~5. Special Exception for Height in Oakland Subdistrict C/Fifth/Forbes (see Section 908.03.D.3(f).~~

~~6. Special Exception for Density (FAR) in Oakland Subdistrict C/Fifth/Forbes (see Section 908.03.D.3(g)~~

~~7. Special Exception for Height in Oakland Subdistrict D/Boulevard of the Allies (see Section 908.03.D.4.f).~~

~~913.03.C Accessory Uses~~ Reserved

~~1. Special Exception for Employees to a Home Occupation (Sec. 912.05.B.1)~~

~~2. Reserved.~~

~~913.03.D Parking Loading and Access~~ Reserved

~~1. Review and Approval Procedure for Large Facilities (Sec. 914.07.D.2)~~

~~2. Off-Site Parking (Sec. 914.07.G.2(a))~~

~~3. Bicycle Parking (Sec. 914.07.G.2(b))~~

~~4. Transportation Management Plan (Sec. 914.07.G.2(c))~~

~~5. Transit Stops (Sec. 914.07.G.2(d))~~

~~6. Exception to Off-Street Parking Schedule (Sec. 914.11.A.1)~~

Section 39. The Pittsburgh Code, Title Nine, Zoning Code, Article VI, Development Standards, is hereby amended at Chapter 914 Parking Loading and Access as follows:

~~CHAPTER 914: PARKING LOADING AND ACCESS~~

~~914.01. General.~~

~~914.01.A Purpose~~

~~The purpose of these regulations is to:~~

~~1. Allow flexibility in addressing vehicle parking, loading, and access issues;~~

~~2. Present a menu of strategies to solve parking issues rather than parking space requirements;~~

~~3. Maintain and enhance a safe and efficient transportation system that is consistent with environmental goals and clean air; and~~

~~4. Ensure that off-street parking, loading, and access demands associated with new development will be met without adversely affecting other nearby land uses and surrounding neighborhoods.~~

~~914.01.B Applicability~~

~~914.01.B.1 New Development~~

~~The parking, loading and access standards of this chapter shall apply to any new building~~

~~constructed and to any new use established, in accordance with the standards of this chapter.~~

~~914.01.B.2 Expansions and Alterations~~

~~The parking, loading and access standards of this chapter shall apply when an existing structure or use is expanded or enlarged. Additional offstreet parking and loading spaces shall be required only to serve the enlarged or expanded area, not the entire building or use.~~

~~914.01.B.3 Change of Occupancy~~

~~Off-street parking and loading facilities shall be provided for any change of occupancy or manner of operation that would, based on Parking Schedules A or B (Sec. 914.02.A and Sec. 914.02.B) or the Off-Street Loading Schedule of Sec. 914.10, result in a requirement for more parking or loading spaces than the existing or more recent use. Additional parking or loading spaces shall be required only in proportion to the extent of the change, not for the entire~~ building or use.

~~914.01.C No Reduction Below Minimums and No Increase Above Maximums~~

~~Existing parking and loading spaces shall not be reduced below the minimums required in this chapter, nor shall spaces be provided in excess of stated maximums. Any change in use that increases applicable offstreet parking or loading requirements shall be a violation of this code unless parking and loading spaces are provided in accordance with the provisions of this chapter.~~

~~914.01.D Nonconforming Status~~

~~A use that was legally established prior to the adoption of this ordinance shall not be deemed nonconforming solely as a result of providing fewer than the minimum number or more than the maximum number of off-street parking or loading spaces established in Sec. 914.02.A or Sec. 914.02.B.~~

~~914.01.E Compliance with Zoning District Regulations~~

~~Unless otherwise specifically stated, off-street parking, loading and circulation areas shall comply with the property development standards of the zoning district in which they are located.~~

~~914.02. Off-Street Parking Schedules.~~

~~914.02.A Schedule A~~

~~Off-street parking spaces shall be provided in accordance with the minimum and maximum standards included in Parking Schedule A. In lieu of complying with the standards of Parking Schedule A, an applicant may request approval of an Alternative Access and Parking Plan, pursuant to Sec. 914.07. The Zoning Administrator may require an Alternative Access and Parking Plan to be submitted for uses allowed in residential district. The parking schedule in~~

~~this section shall not apply to the Bicycle Parking Requirement of Section 914.05.D.~~

~~Use Type~~	~~Minimum Off-Street Automobile Spaces Required~~	~~Maximum Off-Street Automobile Spaces~~ Allowed
~~Residential Uses~~		
~~Single-Unit, Detached~~	~~1 per unit~~	4 per unit
~~Single-Unit Attached~~	~~0 per unit~~	4 per unit
~~Two-Unit~~	~~1 per unit~~	2 per unit
~~Three-Unit~~	~~1 per unit~~	~~2 per unit~~
~~Multi-Unit~~	~~1 per unit~~	~~2 per unit~~
~~Group Residential~~	~~1 per 4 residents~~	~~No maximum~~
~~Housing for the Elderly~~	~~Parking Demand Analysis Required, see Sec. 914.02.B~~	
~~Non-Residential Uses~~		
~~Adult Entertainment~~	~~1 per 500 s.f. above first 2,400~~ s.f.	~~1 per 150 s.f.~~
~~Amusement Arcade~~	~~1 per 500 s.f. above first 2,400~~ s.f.	~~1 per 150 s.f.~~
~~Animal Care~~	~~1 per 400 s.f. above first 2,400~~ s.f.	
~~Art or Music Studio~~	1 per 800 s.f.	~~1 per 300 s.f.~~
~~Assembly, Public~~	~~Parking Demand Analysis Required, See Sec. 914.02.B~~	
~~Bank or Financial Institution~~	~~1 per 500 s.f. above first 2,400~~ s.f.	~~1 per 300 s.f.~~
~~Bed and Breakfast~~	~~See Bed and Breakfast Regulations, Sec. 911.04.A.7-9~~	
~~Basic Industry~~	~~Parking Demand Analysis Required, see Sec. 914.02.B~~	
~~Car Wash~~	~~4 queuing spaces per bay for automatic wash; 2 queuing spaces per bay for self-service~~	
~~Cemetery~~	~~Parking Demand Analysis Required, see Sec. 914.02.B~~	
~~Check Cashing~~	~~1 per 500 s.f. above first 2,400~~ s.f.	~~1 per 175 s.f.~~
~~Child Care (Limited)~~	~~0~~	~~No Maximum~~
~~Child Care (General)~~	~~1 per 800 s.f.~~	~~1 per 400 s.f.~~
~~Club~~	~~One (stall) per 125 square feet above the first 2,400 square feet~~	
~~Community Center~~	~~1 per 500 s.f.~~	~~1 per 200 s.f.~~

~~Correctional Facility~~	~~Parking Demand Analysis Required, see Sec. 914.02.B~~	
~~Cultural Services~~	~~1 per 800 s.f.~~	~~1 per 300 s.f.~~

~~Educational Institution not otherwise listed~~	~~1 per 800 s.f.~~	~~1 per 300 s.f.~~
~~Freight Terminal~~	~~Parking Demand Analysis Required, see Sec. 914.02.B~~	
~~Funeral Home~~	~~4 per viewing room~~	
~~Gaming Enterprise~~	~~Parking Demand Analysis required, see 914.02.B~~	
~~Golf Course~~	~~2 spaces per hole, plus 1 space p~~	~~4 per unit~~
~~Grocery Store, up to 10,000 s.f.~~	~~1 per 500 s.f. above first 2,400 s~~	~~1 per 200 s.f.~~
~~Grocery Store, over 10,000 s.f.~~	~~1 per 150 s.f.~~	1 per 100 s.f.
~~Hazardous Operations~~	~~Parking Demand Analysis Required, see Sec. 914.02.B~~	
~~Heliport, Helistop, Helipad~~	~~1 per 1,000 s.f. of operational ar~~	
~~Hospital~~	~~Parking Demand Analysis Required, see Sec. 914.02.B~~	
~~Incinerator, Solid Waste~~	~~Parking Demand Analysis Required, see Sec. 914.02.B~~	
~~Institutional Facility not otherwise listed~~	~~1 per 800 s.f.~~	1 per 300 s.f.
~~Laboratory/Research Service~~	~~1 per 500 s.f. above first 2,400 s~~	1 per 200 s.f.
~~Laundry Service~~	~~Parking Demand Analysis Required, see Sec. 914.02.B~~	
~~Library~~	~~1 per 600 s.f.~~	~~1 per 200 s.f.~~
~~Manufacturing and Assembly~~	~~Parking Demand Analysis Required, see Sec. 914.02.B~~	
~~Medical Office~~	~~1 per 400 s.f. above first 2,400 s~~	
~~Office~~	~~1 per 500 s.f. above first 2,400 s~~	
~~Parks and Recreation~~	~~Parking Demand Analysis Required, see Sec. 914.02.B~~	
~~Pawn Shop~~	~~1 per 500 s.f. above first 2,400 s~~	~~1 per 175 s.f.~~
~~Post Office~~	~~Parking Demand Analysis Required, see Sec. 914.02.B~~	
~~Recreation/Entertainment, Outdoor~~	~~Parking Demand Analysis Required, see Sec. 914.02.B~~	
~~Recreation/Entertainment, Indoor~~	~~1 per 500 s.f. above first 2,400 s.f. or 1 per 5 seats, whichever is~~	
~~Recycling Processing Center~~	~~Parking Demand Analysis Required, see Sec. 914.02.B~~	
~~Religious Assembly~~	~~1 per 5 seats~~	
~~Restaurant, Fast Food~~	~~1 per 500 s.f., plus 6 queuing sp~~	~~1 per 175 s.f.~~
~~Restaurant~~	~~1 per 500 s.f. above first 2,400 s~~	~~1 per 175 s.f.~~
~~Retail Sales and Services~~	~~1 per 500 s.f. above first 2,400 s~~	~~1 per 175 s.f.~~

~~Safety Service~~	~~Parking Demand Analysis Required, see Sec. 914.02.B~~	
~~Salvage Yard~~	~~1 per 1,000 s.f. above first 2,400 lot~~	
~~School, Elementary or Secondary~~	~~Parking Demand Analysis Required, see Sec. 914.02.B~~	
~~Service Station~~	~~2 per service bay~~	
~~Transit Facility~~	~~Parking Demand Analysis Required, see Sec. 914.02.B~~	
~~Utility, Public~~	~~Parking Demand Analysis Required, see Sec. 914.02.B~~	
~~Vehicle/Equipment Repair~~	~~2 per service bay~~	
~~Vehicle/Equipment Sales~~	~~Parking Demand Analysis Required, see Sec. 914.0~~	
~~Vocational or Trade School~~	~~1 per 500 s.f.~~	
~~Warehouse~~	~~Parking Demand Analysis Required, see Sec. 914.0~~	
~~Warehouse, Residential Storage~~	~~1 space, plus 1 per service bay~~	
~~Welding or Machine Shop~~	~~Parking Demand Analysis Required, see Sec. 914.0~~	

~~914.02.B Uses Requiring Parking Demand Analysis~~

~~Uses requiring parking demand analysis have widely varying parking demands, making it difficult to specify a single requirement. The off-street parking requirement for such uses shall be established by the Zoning Administrator based on estimates of parking demand, which may include recommendations of the Institute of Traffic Engineers (ITE), data collected from uses that are the same or comparable to the proposed use, or other relevant information. The Zoning Administrator~~ may require that an applicant submit a parking study that provides analysis and justification for the ~~proposed number of spaces to be provided. Parking studies shall document the source of data used to develop the recommendations. The Zoning Administrator will review the submitted study along with any other traffic engineering and planning data that are appropriate and establish the minimum and maximum off-street parking requirement (including bicycle parking) for the use proposed.~~

~~914.02.C Structured Parking Required~~

~~All principal and accessory off-street parking uses in the GT, DR, EMI and SP Districts, where more than one hundred fifty (150) number of spaces are provided, shall comply with the following requirements:~~

~~(a) Surface parking shall be permitted for no more than one hundred fifty (150) spaces;~~

~~(b) All parking in excess of one hundred fifty (150) spaces shall be structured;~~

~~(c) In no case shall an accessory parking area or structure occupy more than half the lot area of the lot containing the principal use that the parking area or structure serves.~~

~~914.03. Rules for Computing Requirements.~~

~~The following rules shall apply when computing the number of spaces required pursuant to Parking Schedule A (Sec. 914.02.A).~~

~~914.03.A Fractions~~

~~When calculation of the number of required offstreet parking spaces results in a fractional number, a fraction of less than one-half (½) shall be disregarded and a fraction of one-half (½) or more shall be rounded to the next highest whole number.~~

~~914.03.B Multiple Uses or Activities~~

~~When two (2) or more uses, activities, or separate establishments are located within the same~~ development, off-street parking shall be provided for each use or separate establishment according to the Parking Schedule A (Section 914.02.A), unless a shared parking plan is approved pursuant to ~~Section 914.07.G.1. In the event that one (1) or more uses within a multi-use development are of a~~ size that would otherwise exempt them from compliance with off-street parking requirements, only ~~one (1) such exemption shall be permitted to be taken for the entire development.~~

~~914.03.C Calculation of Floor Area~~

Unless otherwise stated, all square footage-based off-street parking standards shall be computed on the basis of gross floor area used or intended to be used for service to customers, patrons, clients or patients, or as tenants, including areas occupied by fixtures and equipment used for display or sale of ~~merchandise. It need not include floors or parts of floors used principally for nonpublic purposes,~~ such as the storage, incidental repair, processing or packaging of merchandise, for show windows, or for offices incidental to the management or maintenance of stores or buildings when these areas are in separate rooms from the principal use of the building. Floors or parts of floors used principally for ~~rest rooms or for utilities or for fitting rooms, dressing rooms and alteration rooms shall also be excluded from the definition of "floor area" for the purpose of computing off-street parking requirements. These provisions notwithstanding, the "floor area" used as the basis for computing off-street parking requirements shall never be less than eighty (80) percent of the total gross floor area.~~

~~914.03.D Bench Seating~~

~~When seating consists of benches, pews or other similar seating facilities, each twenty (20) linear inches of seating space shall be counted as one (1) seat.~~

~~914.03.E Employees, Students and Occupants~~

~~For the purpose of computing parking requirements based on the number of employees, students,~~ residents or occupants, calculations shall be based on the largest number of persons working on any single shift, the maximum enrollment or the maximum fire-rated capacity, whichever is applicable.

~~914.03.F New and Unlisted Uses~~

Upon receiving a development application for a use not specifically listed in the Parking Schedule A ~~(Section 914.02.A), the Zoning Administrator shall apply the off-street parking standards of the listed use that is deemed most similar to the use proposed or require that a parking study be submitted pursuant to Section 914.02.B.~~

~~914.04. Off-Street Parking Exemption/Reduction Areas.~~

~~The minimum off-street parking requirements of Section 914.02.A shall be decreased as shown in the following table for uses located in districts designated on the Official Zoning Map as "Parking Exempt Areas." Uses located in Parking Exempt Areas shall provide no more than the otherwise required minimum parking ratio established in Section 914.02.A.~~

Area	~~Use Type~~	~~Percent Decrease~~
~~SP Districts & PUDs~~	~~Any use~~	~~Parking Demand Analysis Required, see Sec. 914.02.B~~
~~Downtown~~	~~Any use~~	~~100~~
~~East Liberty~~	~~Any use except residential~~	~~50~~
~~SP-11 Lower Hill Planned Development~~	~~Any use~~	~~100~~
~~North Side~~	~~Any use except residential~~	~~25~~
~~Uptown Public Realm District~~	~~Any use~~	~~100~~
~~Riverfront Zoning Districts~~	~~Any use~~	~~50~~
~~UC-MU and R-MU Zoning Districts~~	~~Any use~~	~~50~~
~~UC-E Zoning Districts~~	~~Any use~~	~~100~~

~~The parking reductions of this section shall not be applicable to the minimum Bicycle Parking requirements of Section 914.05.~~

~~914.05. Bicycle Parking~~

To further the intent of this Chapter to allow flexibility and equity in addressing vehicle parking issues ~~and to present a menu of parking allocation strategies, this section requires and incentivizes bicycle~~ parking. This section seeks to facilitate the lessening of car-related congestion in the City by promoting bicycle commuting by requiring the provision of adequate and safe facilities for the storage of bicycles. Further, this section allows a reduction in required automobile parking spaces when bicycle parking is ~~accommodated, creating a benefit for meeting the requirements of this Chapter.~~

~~914.05.A Special Definitions~~

~~1. Bicycle Parking Space means a four (4) feet by six (6) feet space provided for locking up to two (2) bicycles to a City approved Bicycle Rack or a bicycle locker that can store up to two (2) bicycles per unit.~~

~~2. Bicycle Rack means a stationary device with a base that can wedge anchors for surface~~ mounting, provides steel tubing one (1) inch to four (4) inches thick, containing locking

points ~~between one (1) feet and three (3) feet off the ground and a gap near the bottom for pedal~~ ~~clearance, enabling one to lock a bicycle frame and one (1) of the wheels with a standard U-~~ ~~Lock. Such a rack must be able to accommodate at least two (2) bicycles upright by rack~~ ~~frame.~~

3. ~~Protected Bicycle Parking Spaces are secure facilities which protect the entire bicycle, its~~ ~~components and accessories against theft and against inclement weather, including wind-~~ ~~driven rain. This type of facility includes, but is not limited to bicycle lockers, check-in~~ ~~facilities, monitored bicycle parking, restricted access parking, and personal storage.~~

4. ~~Unprotected Bicycle Parking Spaces are Bicycle Racks which permit the locking of the bicycle~~ frame and one (1) wheel to the rack and which support the bicycle in a stable position without ~~damage to wheels, frame or components.~~

5. ~~Low Occupancy Facility means a building or use with limited customer or non-employee contact~~ and less than one (1) employee per every ten thousand (10,000) square feet of gross floor area.

~~914.05.B Locations and Facilities~~

1. ~~Bicycle parking shall be provided in a well-lighted area.~~

2. ~~Bicycle parking shall be at least as conveniently located as the most convenient automobile~~ ~~spaces, other than those spaces for persons with disabilities. Safe and convenient means of~~ ~~ingress and egress to bicycle parking facilities shall be provided. Safe and convenient shall~~ ~~include, but is not limited to stairways, elevators and escalators.~~

3. ~~Bicycle Parking facilities shall not interfere with accessible paths of travel or accessible parking~~ ~~as required by the Americans with Disabilities Act of 1990.~~

4. ~~Protected and Unprotected Bicycle Racks shall be located in highly visible areas to minimize~~ ~~theft and vandalism.~~

5. ~~In cases of structured automobile parking, Protected Bicycle Parking Spaces shall be used.~~

6. ~~Alternative Locations and facilities. In the event that compliance with Section 914.05.B or 914.05.C~~ ~~may not be feasible or ideal because of demonstrable hardship or due to a creative~~ design alternative, the Zoning Administrator may approve an alternative storage location. The ~~Zoning Administrator shall be guided by the following criteria:~~

   a. ~~Such alternative facilities shall be well-lighted and secure.~~

   b. ~~All Bicycle Parking Spaces outside of a building shall be located within a one hundred (100) foot diameter of the primary building entrance.~~

   c. ~~Bicycle Racks may be placed in the public right-of-way provided that the building owner~~ ~~attains an encroachment permit for the installation of racks in the public right-of-way~~ ~~from the Department of Mobility and Infrastructure.~~

~~914.05.C Layout of Spaces~~

~~Bicycle Parking Spaces or alternative spaces approved by the Zoning Administrator shall be laid out~~ ~~according to the~~

~~following:~~

1. ~~All bicycle parking areas shall afford a four (4) foot wide access aisle to ensure safe access to spaces.~~
2. ~~Bicycle parking and automobile parking shall be located so as to protect bicycles from damage.~~
3. ~~In cases where Bicycle Parking Spaces are not visible from the primary street, signage shall be used to direct cyclists safely to bicycle parking areas.~~
4. ~~All Bicycle Racks and lockers shall be securely anchored to the ground or building structure.~~
5. ~~Bicycle Parking Spaces shall not interfere with pedestrian circulation and shall adhere to ADA requirements.~~
6. ~~Bicycle parking shall be an integral part of the overall site layout and designed to minimize visual clutter.~~

~~914.05.D Bicycle Parking Requirement~~

~~Bicycle Parking Spaces shall be provided in accordance with the following tables:~~

1. ~~For all Non-Residential uses except, Hotel/Motel, Commercial Parking, Parking Structure, and Low Occupancy Facilities (as defined in Section 914.05.A.5):~~

~~Gross Floor Area~~	**~~Required Minimum Number of Bicycle Parking Spaces~~**
~~0-6,000 s.f.~~	0
~~6,001-20,000 s.f.~~	1
~~Over 20,000 s.f.~~	~~1 per every 10,000 s.f. or fraction thereof~~

2. ~~For Multi-Unit Residential:~~

~~Number of Dwelling Units~~	**~~Required Minimum Number of Bicycle Parking Spaces~~**
~~Less than 12~~	~~0~~
~~12 or more~~	~~1 per every 3 dwelling units or a fraction thereof~~

(a) ~~At least sixty (60) percent of all bicycle parking spaces provided must be Protected Bicycle Parking Spaces.~~

3. ~~For Commercial Parking and Parking Structure uses:~~

~~Number of Automobile Spaces~~	**~~Required Minimum Number of Bicycle Parking Spaces~~**

~~0-4~~	~~0~~
~~4-20~~	~~1~~
~~21-40~~	~~2~~
~~Over 40~~	~~1 per every 10 spaces or a fraction thereof~~

~~4. For Low Occupancy Facilities and Hotel/Motel uses:~~

~~**Number of Employees**~~	~~**Required Minimum Number of Bicycle Parking Spaces**~~
~~0-5~~	~~0~~
~~6-20~~	~~1~~
~~21-80~~	~~2~~
~~Over 80~~	~~1 per every 20 employees or a fraction thereof~~

~~(a) To certify a building or use as a Low Occupancy Facility, the building owner or applicant shall attach to any zoning permit application, an affidavit attesting to the number of employees required for the use.~~

~~When calculating the minimum number of Protected and/or Unprotected parking spaces required results in a fractional number, a fraction of less than one-half (½) shall be disregarded and a fraction of one-half (½) or more shall be rounded to the next highest whole number.~~

~~**914.05.E Street Parking Reduction for Bicycle Parking**~~

~~1. A reduction in the number of off-street parking spaces required by Section 914.02.A (excluding parking spaces for persons with disabilities) shall be permitted for the provision of bicycle parking provided that:~~

~~(a) No fee is required for using the bicycle parking made available;~~

~~(b) When calculation of the maximum number of reduced parking spaces results in a fraction, the resulting number shall be rounded to the next highest integer.~~

~~2. The reduction in the number of automobile parking spaces shall be reduced by no more than one (1) space for each Bicycle Parking Space, but by no more than thirty (30) percent of the total~~ required spaces.

~~3. This provision can not be applied to Single-Unit Residential, Two-Unit Residential, Three-Unit Residential, Animal Care, Car Wash, Salvage Yard, Service Station, and Vehicle/Equipment~~ Repair uses.

~~For unlisted uses and uses requiring Parking Demand Analysis (Section 914.02.B), bicycle parking shall be integrated into a comprehensive, multimodal transportation plan approach. The extent of required parking and incentive reductions for any mode of travel will reflect the~~

~~planned, apparent or potential system connectivity opportunities of that area in relation to the City transportation network.~~

~~1. (Ord. No. 7-2010, § 3, eff. 4-1-10; Ord. No. 2-2018, § 28, eff. 2-15-18)~~

~~914.06. Parking for Persons with Disabilities.~~

~~A portion of the total number of required parking spaces shall be specifically designated, located and reserved for use by persons with disabilities.~~

~~914.06.A Number of Spaces~~

~~Parking spaces reserved for persons with disabilities shall be counted toward fulfilling overall off-~~ street parking standards. The minimum number of spaces to be reserved for persons with disabilities ~~shall be as follows:~~

~~**Residential Uses**~~	
	~~**Minimum Reserved Spaces Required**~~
~~Less than 4 Dwelling Units~~	~~0~~
~~4 to 25 Dwelling Units~~	~~1~~
~~Non-Residential Uses and Parking Spaces Provided for Dwelling Units in Excess of 25~~	
~~**Parking Spaces Required**~~	~~**Minimum Reserved Spaces Required**~~
~~1-25~~	~~1~~
~~26-50~~	~~2~~
~~51-75~~	~~3~~
~~76-100~~	~~4~~
~~101-150~~	5
~~151-200~~	6
~~201-300~~	7
~~301-400~~	8
~~401-500~~	9
~~501-1,000~~	2% of total spaces
~~Over 1,000~~	~~20, plus 1 for each 100 spaces over 1,000~~

One (1) in every eight (8) accessible spaces, but not less than one (1), shall be served by an access ~~aisle eight (8) feet wide minimum and shall be designated "van accessible" as required by Americans with Disabilities Act of 1990. The vertical clearance at such spaces shall comply with Americans with Disabilities Act of 1990. All such spaces may be grouped on one (1) level of a parking structure.~~

~~914.06.B Minimum Dimensions~~

All parking spaces reserved for people with disabilities shall be at least nineteen (19) feet in length and at least eight (8) feet wide and shall provide minimum vertical clearance of eight (8) feet two (2) inches at the parking

space and along at least one (1) vehicle access route to such spaces from site entrance(s) and exit(s). Parking access aisles shall be part of an accessible route to the building or facility entrance and shall be five (5) feet wide, except parking spaces reserved for vans, which shall ~~be eight (8) feet wide in accordance with Sec. 914.06.A. Two (2) accessible parking spaces may share a common access aisle. Parked vehicle overhangs shall not reduce the clear width of an~~ accessible route. Parking spaces and access aisles shall be level with surface slopes not exceeding~~1~~

~~914.06.C Location of Spaces~~

~~Accessible parking spaces serving a particular building shall be located on the shortest accessible~~ route of travel from adjacent parking to an accessible entrance. In parking facilities that do not serve ~~a particular building, accessible parking shall be located on the shortest accessible route of travel to an accessible pedestrian entrance of the parking facility. In buildings with multiple accessible entrances with adjacent parking, accessible parking spaces shall be dispersed and located closest to the accessible entrances.~~

~~914.06.D Signs and Markings~~

Required spaces for persons with disabilities shall be designated with signs and pavement markings identifying them as reserved for persons with disabilities. The required sign shall clearly indicate the ~~maximum fine assessed on violators. The size of the sign shall not exceed four (4) square feet.~~

Van-accessible spaces shall have an additional sign "Van-Accessible" mounted below the symbol of ~~accessibility. Such signs shall be located so as not to be obscured by a vehicle parked in the space.~~

~~914.06.E Parking for Persons with Disabilities, Passenger Loading Zones~~

Passenger loading zones shall provide an access aisle at least five (5) feet wide and twenty (20) feet ~~long adjacent and parallel to the vehicle pull-up space. If there are curbs between the access aisle~~ and the vehicle pull-up space, then a curb ramp complying with Americans with Disabilities Act of 1990 shall be provided. Vehicle standing spaces and access aisles shall be level with surface slopes ~~not exceeding 1:50 (two (2) percent) in all directions. Minimum vertical clearance of nine (9) feet six (6) inches shall be provided at accessible passenger loading zones and along at least one (1) vehicle access route to such areas from site entrance(s) and exit(s).~~

~~914.07. Alternative Access and Parking Plans.~~

~~914.07.A Scope~~

~~An Alternative Access and Parking Plan represents a proposal to meet vehicle parking and transportation access needs by means other than providing parking spaces on-site in accordance with the ratios established in Sec. 914.02.A.~~

~~914.07.B Applicability~~

~~Applicants who wish to provide fewer or more off-street parking spaces than allowed pursuant to the Parking Schedule A (Sec. 914.02.A) shall be required to secure approval of an Alternative Access and Parking Plan, in accordance with the standards of this section. The Zoning Administrator may require that an Alternative Access and Parking Plan be submitted in cases where the Zoning~~ Administrator deems the listed standard to be inappropriate based on the unique nature of the use or ~~in cases where the applicable standard is unclear.~~

~~914.07.C Contents~~

~~Alternative Access and Parking Plans shall be submitted in a form established by the Zoning Administrator and made available to the public. At a minimum, such plans shall detail the type of alternative proposed and the rationale for such a proposal.~~

~~914.07.D Review and Approval Procedure~~

~~914.07.D.1 Small Facilities~~

~~If ten or fewer off-street parking spaces are required pursuant to Parking Schedule A (Sec. 914.02.A), the Zoning Administrator shall be authorized to approve, approve with conditions, approve in part, deny, or deny in part the Alternative Access and Parking Plan for that use.~~
~~Notification shall be provided in the form of a sign posted on the site of the primary use and the proposed parking facility (if any) at least ten (10) days before the Zoning Administrator takes action on the plan.~~

~~914.07.D.2 Large Facilities~~

~~The Zoning Board of Adjustment shall be authorized, in accordance with the Special Exception provisions of Sec. 922.07, to approve, approve with conditions, approve in part, deny, or deny in part Alternative Access and Parking Plans for uses that require more than ten off-street parking spaces (pursuant to Parking Schedule A [Sec. 914.02.A]). A public hearing shall be required. Notification shall be provided in the form of (1) a sign posted on the site of the~~ primary use and the proposed parking facility (if any) at least twenty-one (21) days before the hearing and (2) written notification at least fifteen (15) days prior to the hearing to all property ~~owners and registered neighborhood associations within three hundred (300) feet of the proposed use and within three hundred (300) feet of the parking area.~~

~~914.07.E Recording~~

~~An attested copy of an approved Alternative Access and Parking Plan shall be submitted to County Recorder's office for recordation on forms made available in the Office of the Zoning Administrator. Proof of recordation of the agreement shall be presented to the Zoning Administrator prior to issuance of a building permit. An approved Alternative Access and Parking Plan may be amended by the Zoning Board of Adjustment pursuant to Sec. 914.07.~~

~~914.07.F Violations~~

~~Violations of an approved Alternative Access and Parking Plan shall be considered violations of this Zoning Code and subject to the enforcement and penalty provisions of Chapter 924.~~

~~914.07.G Eligible Alternatives~~

~~A number of specific parking and access alternatives are described in Secs. 914.07.G.1 through 914.07.G.6.~~

~~914.07.G.1 Administrator Exceptions~~

~~The Zoning Administrator shall be authorized, in accordance with the Administrator Exception~~ provisions of Sec. 922.08, to consider and approve the following alternatives to providing off- ~~street parking spaces on the site of the subject development if the applicant demonstrates to the~~ satisfaction of the Zoning Administrator that the proposed plan will result in a better situation with respect to surrounding neighborhoods, citywide traffic circulation and urban design than ~~would strict compliance with otherwise applicable off-street parking standards.~~

~~(a)~~ Shared Parking

~~It is the City's policy to encourage efficient use of land and resources by allowing users to share off-street parking facilities for multiple use developments or for uses that are located near one (1) another and that have different peak parking demands or different operating hours. Shared parking shall be subject to the following standards.~~

~~(1)~~ Location

~~Shared off-street parking spaces shall be located no further than one thousand (1,000) feet from the buildings and uses they are intended to serve. This distance limitation may be waived by the Zoning Board of Adjustment if adequate assurances are offered that van or shuttle service will be operated between the shared lot and the principal use.~~

~~(2) Zoning Classification~~

~~Shared parking areas shall be considered accessory uses of primary uses that the parking spaces are intended to serve. Shared parking areas shall require the same or a more intensive zoning classification than that required for the most intensive of the uses served by the shared parking area.~~

~~(3) Required Study and Analysis~~

~~The applicant shall submit a shared parking analysis to the Zoning Administrator which clearly demonstrates the feasibility of shared parking. The study shall be~~ provided in a form established by the Zoning Administrator and made available to ~~the public. It shall address, at a minimum, the size and type of the proposed development, the composition of tenants, the anticipated rate of parking turnover and the anticipated peak parking and traffic loads for all uses that will be sharing off-street parking spaces.~~

~~(4) Report from Planning Director~~

The Zoning Board of Adjustment shall request a report and recommendation from the Planning Director on the planning aspects of the proposed shared parking use.

~~(5) Shared Parking Agreement~~

~~A shared parking plan shall be enforced through written agreement among the~~ owners of record. An attested copy of the agreement shall be submitted to County ~~Recorder's office for recordation on forms made available in the Office of the~~ Zoning Administrator. Proof of recordation of the agreement shall be presented to the Zoning Administrator prior to issuance of a building permit. A shared parking ~~agreement may be revoked by the parties to the agreement only if off-street parking is provided pursuant to Sec. 914.02.A, or if an Alternative Access and Parking Plan is approved by the Zoning Board of Adjustment pursuant to Sec. 914.07.~~

~~(6) Revocation of Permits~~

Failure to comply with the shared parking provisions of this section shall constitute a violation of this code and shall specifically be cause for revocation of a building ~~permit.~~

~~(b) Valet Parking~~

~~The Zoning Administrator shall be authorized, in accordance with the Administrator Exception provisions of Sec. 922.08, to permit valet parking as a means of satisfying otherwise applicable off-street parking standards, provided that the following standards are met:~~

~~(1) An automobile shall be retrievable from its parking space with the movement of a maximum of two (2) additional vehicles; and~~

~~(2) The Zoning Administrator certifies that the valet parking will not cause interference with the public use of streets or ways or imperil the public safety.~~

~~914.07.G.2~~ ~~Special Exceptions~~

~~The Zoning Board of Adjustment shall be authorized, in accordance with the Special Exception provisions of Sec. 922.07, to consider and approve any alternative to providing off-street parking spaces on the site of the subject development if the applicant demonstrates to the satisfaction of the Zoning Board of Adjustment that the proposed plan will result in a better situation with respect to surrounding neighborhoods, citywide traffic circulation and urban design than would strict compliance with otherwise applicable off-street parking standards.~~

~~(a) Off-Site Parking~~

~~The Zoning Board of Adjustment shall be authorized, in accordance with the Special Exception provisions of Sec. 922.07, to permit all or a portion of the required off-street parking spaces to be located on a remote and separate lot from the lot on which the primary use is located, subject to the~~

~~following standards.~~

~~(1) Location~~

No off-site parking space shall be located more than one thousand (1,000) feet from the primary entrance of the use served, measured along the shortest legal, practical ~~walking route. This distance limitation may be waived by the Zoning Board of Adjustment if adequate assurances are offered that van or shuttle service will be operated between the shared lot and the primary use.~~

~~(2) Zoning Classification~~

~~Off-site parking areas shall be considered accessory uses of primary uses that the~~ parking spaces are intended to serve. Off-site parking areas shall require the same or ~~a less restrictive zoning classification than that required for the use served.~~

~~(Ord. 28/November 17, 2000/Amend. U-25)~~

~~(3) Report from Planning Director~~

The Zoning Board of Adjustment shall request a report and recommendation from ~~the Planning Director on the planning aspects of the proposed shared parking use.~~

~~(4) Off-Site Parking Agreement~~

~~In the event that an off-site parking area is not under the same ownership as the primary use served, a written agreement among the owners of record shall be~~ required. An attested copy of the agreement between the owners of record shall be submitted to County Recorder's Office for recordation on forms made available in the office of the Zoning Administrator. Proof of recordation of the agreement shall be presented to the Zoning Administrator prior to issuance of a building permit. An ~~off-site parking agreement may be revoked by the parties to the agreement only if~~ off-street parking is provided on-site pursuant to Sec. 914.02.A or if an Alternative Access and Parking Plan is approved by the Zoning Board of Adjustment pursuant to Sec. 914.07.

~~(b) Reserved~~

~~(c) Transportation Management Plan~~

~~The Zoning Board of Adjustment shall be authorized, in accordance with the Special Exception provisions of Sec. 922.07, to permit a reduction in the number of required off- street parking spaces for developments or uses that institute and commit to maintain a transportation management program, in accordance with the standards of this section.~~

~~(1)~~ Required Study

The applicant shall submit a study to the Zoning Board of Adjustment which clearly indicates the types of transportation management activities and measures proposed. The study shall be provided in a form established by the Zoning Administrator and ~~made available to the public.~~

~~(2) Transportation Management Activities~~

There shall be no limitation on the types of transportation management activities for which reductions may be granted from otherwise required off-street parking ratios. ~~The following measures shall serve as a guide to eligible transportation management activities.~~

~~(i) Posting and Distribution of Information~~

~~The distribution and posting of information from transit agencies and other sources of alternative transportation may be cause for a reduction in otherwise applicable off-street parking requirements.~~

~~(ii) Transportation Coordinator~~

~~The appointment of a Transportation Coordinator with responsibility for~~ disseminating information on ride-sharing and other transportation options ~~may be cause for a reduction in otherwise applicable off-street parking~~ requirements. In addition to acting as liaisons, Transportation Coordinators must be available to attend meetings and training sessions with the City or ~~transit providers.~~

~~(iii) Off-Peak Work Hours~~

~~Employers that institute off-peak work schedules, allowing employees to~~ arrive at times other than the peak morning commute period, may be eligible ~~for a reduction in otherwise applicable off-street parking requirements. The peak morning commute period is defined as 7:30 a.m. - 9:00 a.m.~~

~~(iv) Preferential Parking~~

The provision of specially marked spaces for each registered car pool and van pool may be cause for a reduction in otherwise applicable off-street parking ~~requirements.~~

~~(v) Financial Incentives~~

~~The provision of cash or in-kind financial incentives for employees~~ commuting by car pool, van pool and transit may be cause for a reduction in ~~otherwise applicable parking requirements.~~

~~(3) Report from Planning Director~~

~~The Zoning Board of Adjustment shall request a report and recommendation from the Planning Director on the planning aspects of the proposed shared parking use.~~

~~(d) Transit Stops~~

~~The Zoning Board of Adjustment shall be authorized, in accordance with the Special Exception provisions of Sec. 922.07, to permit the incorporation of transit stops as a means of satisfying the otherwise applicable off-street parking standards, provided the following conditions are met:~~

~~(1) The transit stop shall be designed to be a station or waiting area for transit riders, clearly identified as such, and open to the public at large;~~

~~(2) The transit stop shall be designed as an integral part of the development project,~~ with direct access to the station or waiting area from the development site;

~~(3) The transit waiting area or platform shall be designed to accommodate~~ passengers in a covered waiting area, with seating for a minimum of twenty
~~(20) persons, shall include internal lighting, and shall include other~~

~~features~~ which encourage the use of the facility, such as temperature control within the ~~waiting area or the inclusion of food vendors;~~

~~(4) The maximum reduction in the number of parking spaces shall be no more than twenty (20) percent of the total required spaces;~~

~~(5) The Zoning Board of Adjustment shall request a report and recommendation~~ from the Planning Director on the planning aspects, and the potential impacts of the proposed reduction in parking through the provision of a transit facility;

~~(6) The transit stop shall be maintained by the developer for the life of the development project.~~

~~2. (Ord. No. 57-2021, § 2, eff. 12-27-21~~

~~914.08. Queuing for Drive-Through Facilities.~~

~~In addition to meeting the off-street parking requirements of Sec. 914.02.A, drive-through facilities shall comply with the following standards.~~

~~914.08.A Queue Space Schedule~~

~~The minimum number of queue spaces required shall be as follows. Variations from these minimums may be allowed based on a parking study submitted pursuant to Sec. 914.07.C.~~

~~Use Type~~	~~Minimum Spaces~~	~~Measured From~~
~~Bank Teller Lane~~	~~3~~	Teller or Window
~~Automated Teller Machine~~	~~2~~	Teller Machine
~~Restaurant Drive-Through~~	~~6~~	Order Box
~~Car Wash Stall, Automatic~~	~~4~~	Entrance
~~Car Wash Stall, Self-service~~	~~2~~	Entrance
~~Gasoline Pump Island~~	~~1~~	End of Island

~~914.08.B Minimum Dimensions~~

~~Each queue space shall be a minimum of ten (10) feet by twenty (20) feet in size.~~

~~914.08.C Design~~

~~Each queue lane shall be clearly defined and designed so as not to conflict or interfere with other pedestrian or vehicular traffic using the site.~~

~~914.09. Parking Area Location and Design.~~

~~The location, design and improvement standards of this section shall apply to all off-street parking areas containing five (5) or more parking spaces, except that 914.09.J shall apply to the location of parking access for Single-Unit Attached Residential Uses.~~

~~914.09.A General Design Principles~~

~~914.09.A.1 Location~~

~~Off-street parking areas shall be located so as to minimize their adverse impact on the visual environment. To the maximum extent possible, off-street parking areas shall not be visible from a public street, and in no case shall a surface parking lot in NDI, LNC or UNC zoning district be located within ten (10) feet of the street right-of-way.~~

~~914.09.A.2 Layout~~

~~There shall be safe, adequate, and convenient arrangement of pedestrian pathways, bikeways, roads, driveways, and off-street parking and loading spaces within off-street parking areas. Streets, pedestrian walks, parking areas, and open space shall be designed as integral parts of an overall site design which shall be properly related to existing and proposed buildings, adjacent uses, landscaped areas, and stormwater management features.~~

~~914.09.A.3 Appearance~~

The materials used in the design of paving, lighting fixtures, retaining walls, fences, curbs and ~~benches shall be of good appearance, easily maintained and indicative of their function.~~

~~914.09.A.4 Maintenance~~

~~Parking lots shall be maintained in a safe operating condition so as not to create a hazard or nuisance.~~

~~914.09.B Surfacing~~

Areas used for off-street parking, circulation or vehicle display shall be surfaced with asphalt, concrete, masonry, hard packed slag, or other solid paving materials with sufficient strength to support the vehicle loads imposed, provided that the Zoning Administrator shall be authorized to approve parking areas that are not hard-surfaced when four (4) or fewer parking spaces are ~~involved. All off-street parking and other vehicle circulation areas shall be continuously~~ maintained and designed to preclude free flow of stormwater onto adjacent lots, properties, or ~~public streets or ways and in accordance with Title Thirteen: Stormwater Management, as applicable.~~

~~914.09.C Wheel Stops~~

~~Wheel stops or curbing shall be installed to protect walls, poles, structures, pedestrian walkways or landscaped areas. Wheel stops should be placed within two (2) to three (3) feet from the end of parking spaces.~~

~~914.09.D Landscaping and Screening~~

~~Off-street parking, loading and vehicle display areas shall be landscaped and screened from view in accordance with the Landscaping and Screening Standards of Chapter 918.~~

~~914.09.E Lighting~~

~~Lighting shall be arranged and designed so that no source of light is directed toward any lots used or zoned for residential use. Lighting shall be designed to shield public streets and all other adjacent lands from distracting glare, or hazardous interference of any kind. Vehicular use areas shall not be lighted at any time other than the hours of operation of the use that the parking is intended to serve, except for necessary security lighting.~~

~~914.09.F Parking Area Access~~

~~Access to parking garages and parking areas containing more than five (5) spaces shall be designed to ensure that entering and exiting vehicles do not disrupt vehicle and pedestrian circulation patterns. At a minimum, all garage doors, ticket machines or entrance gates shall be located so as to allow a minimum of twenty (20) feet clearance from sidewalks and street rights-of-way. Driveways serving such parking areas shall be located at least sixty (60) feet from intersecting street rights-of-way, and joint access to abutting parcels shall be provided wherever~~

~~practical.~~

~~914.09.G Parking Structure Design~~

~~914.09.G.1 Screening of Vehicles~~

Parked vehicles shall be screened from view of adjacent streets and residential zoning districts ~~to the maximum extent feasible.~~

~~914.09.G.2 Ground-Floor Uses~~

~~(a)~~ ~~For parking structures greater than one hundred fifty (150) feet in length that are adjacent to store-front commercial uses, active uses shall be located along a minimum of fifty (50) percent of the length of the street-side, street-level perimeter. For the purposes of this Section, active uses shall include commercial, residential, and accessory uses and activities that typically have user-occupied areas that are expressed through building fenestration and articulation.~~

~~(b)~~ ~~Within the RIV District, any ground-level structured parking that has primary frontage along the riverfront or along a street or publicly accessible pedestrian easement shall be screened architecturally or be screened according to the provisions of Section 918.03.B.~~

~~914.09.G.3 Building Lines~~

~~Parking structures shall present a horizontal rather than sloped building line on visible facades.~~

~~914.09.G.4 Parking for Persons with Disabilities, Ground Floor Vehicle Entrances~~

~~Parking structures containing more than one (1) floor shall provide a minimum of nine (9) feet six (6) inches of vertical clearance on the ground floor between all spaces and vehicle access routes to site entrance(s) and exit(s). Signage and other objects may not project into this clearance. Van accessible reserved spaces may be placed on this level in accordance with the requirements of Section 914.06.~~

~~914.09.H Parking Stall Dimensional Standards~~

~~The following minimum dimensional standards shall apply to all off-street parking areas. (Ord. 28/November 17, 2000/Amend. U-25)~~

~~914.09.H.1 Standard-Size Parking Stalls~~

~~A minimum of sixty (60) percent of required off-street parking spaces shall be standard-size spaces, designed in accordance the following minimum dimensional standards. All dimensions~~ are measured in feet.

~~A = angle of parking~~	90°	80°	75°	~~70°~~	~~65°~~	~~60°~~	~~55°~~	~~50°~~	~~45°~~
~~W = width of stall parallel to aisle~~	8.50	8.63	8.80	~~9.05~~	~~9.38~~	~~9.81~~	10.38	11.10	12.02
~~W[1]~~ = width of stall ~~perpendicular to stall~~	8.50	~~8.50~~	~~8.50~~	~~8.50~~	~~8.50~~	~~8.50~~	~~8.50~~	~~8.50~~	~~8.50~~
~~Y = stall length offset~~	0.00	~~1.50~~	~~2.28~~	~~3.09~~	~~3.96~~	~~4.91~~	~~5.95~~	~~7.13~~	~~8.50~~
~~X = stall line length~~	19.00	20.50	21.28	22.09	22.96	23.91	24.95	26.13	27.50
~~L = stall depth perpendicular to wall~~	19.00	20.19	20.55	20.76	20.81	20.70	20.44	20.02	19.45
~~L[1] = stall length~~	19.00	19.00	19.00	19.00	19.00	19.00	19.00	19.00	19.00

~~AW = aisle width~~	24.00	21.00	19.75	18.50	17.25	16.00	14.75	13.50	12.25
~~IL = stall depth~~	19.00	19.45	19.45	19.31	19.02	18.58	18.00	17.29	16.44
~~BW = module, wall to wall~~	62.00	61.37	30.86	60.02	58.87	57.41	55.63	53.54	51.15
~~BWI = module, wall to interlock~~	62.00	60.64	59.76	58.57	57.08	55.28	53.19	50.81	48.14
~~BI = module, interlocking~~	62.00	59.90	58.66	57.12	55.28	53.16	50.75	48.07	45.13
~~BIC = module, interlock to curb face~~	59.50	58.14	57.26	56.07	54.78	52.98	50.89	48.81	46.14
~~I = bumper overhang~~	~~2.50~~	~~2.50~~	~~2.50~~	~~2.50~~	~~2.00~~	~~2.00~~	~~2.00~~	~~2.00~~	~~2.00~~
~~J = offset~~	~~0.00~~	~~0.26~~	~~0.59~~	~~1.06~~	~~1.68~~	~~2.45~~	~~3.41~~	~~4.58~~	~~6.01~~
~~K = setback~~	~~0.00~~	~~3.30~~	~~4.92~~	~~6.50~~	~~8.03~~	~~9.50~~	10.09	12.21	13.44
~~B = cross aisle, one- way~~	16.00	16.00	16.00	16.00	16.00	16.00	16.00	16.00	16.00
~~B1 = cross aisle, two- way~~	24.00	24.00	24.00	24.00	24.00	24.00	24.00	24.00	24.00

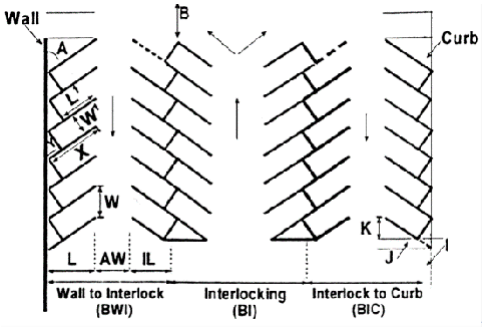

~~**Standard Size Parking Stalls**~~

~~**914.09.H.2 Compact-Size Parking Stalls**~~

~~Up to forty (40) percent of required off-street parking spaces may be compact-size spaces, which shall be designed in accordance the following minimum dimensional standards.~~
~~Compact-size spaces shall be clearly identified by pavement markings. All dimensions are~~ measured in

feet.

~~A = angle of parking~~	90°	80°	75°	70°	65°	~~60°~~	~~55°~~	~~50°~~	~~45°~~
~~W = width of stall parallel to aisle~~	7.75	7.87	8.02	~~8.25~~	~~8.55~~	~~8.95~~	~~9.46~~	10.12	10.95
~~W1~~ = width of stall ~~perpendicular to stall~~	7.75	7.75	7.75	~~7.75~~	~~7.75~~	~~7.75~~	~~7.75~~	~~7.75~~	~~7.75~~
~~Y = stall length offset~~	0.00	~~1.37~~	~~2.08~~	~~2.82~~	~~3.61~~	~~4.47~~	~~5.43~~	~~6.50~~	~~7.75~~
~~X = stall line length~~	16.50	17.87	18.58	19.32	20.11	20.97	21.93	23.00	24.25
~~L = stall depth perpendicular to wall~~	16.50	17.60	17.94	18.16	18.23	18.16	17.96	17.62	17.15
~~L1 = stall length~~	16.50	16.50	16.50	16.50	16.50	16.50	16.50	16.50	16.50
~~AW = aisle width~~	20.00	17.50	16.64	15.78	14.92	14.06	13.20	12.34	11.48
~~IL = stall depth~~	16.50	16.92	16.94	16.83	16.59	16.23	15.74	15.13	14.41
~~BW = module, wall to wall~~	53.00	52.69	52.53	52.09	51.38	50.39	49.12	47.58	45.77
~~BWI = module, wall to interlock~~	53.00	52.02	51.52	50.77	49.74	48.45	46.90	45.09	43.03
~~BI = module, interlocking~~	53.00	51.34	50.52	49.44	48.10	46.51	44.68	42.60	40.29
~~BIC = module, interlock to curb face~~	50.50	49.52	49.02	48.27	47.44	46.15	44.60	43.09	41.03
~~I = bumper overhang~~	~~2.50~~	~~2.50~~	~~2.50~~	~~2.50~~	~~2.30~~	~~2.30~~	~~2.30~~	~~2.00~~	~~2.00~~
~~J = offset~~	~~0.00~~	~~0.24~~	~~0.54~~	~~0.96~~	~~1.53~~	~~2.24~~	~~3.11~~	~~4.18~~	~~5.48~~
~~K = setback~~	~~0.00~~	~~2.87~~	~~4.27~~	~~5.64~~	~~6.97~~	~~8.25~~	~~9.46~~	~~10.61~~	~~11.67~~
~~B = cross aisle, one- way~~	~~12.00~~	~~12.00~~	~~12.00~~	~~12.00~~	~~12.00~~	~~12.00~~	~~12.00~~	~~12.00~~	~~12.00~~
~~B1 = cross aisle, two- way~~	~~20.00~~	~~20.00~~	~~20.00~~	~~20.00~~	~~20.00~~	~~20.00~~	~~20.00~~	~~20.00~~	~~20.00~~

~~914.09.I Stripes and Markings~~

~~Parking stalls shall be delineated by double-striping, in accordance with the following general design guidelines and rules established and made available to the public by the Transportation Planner.~~

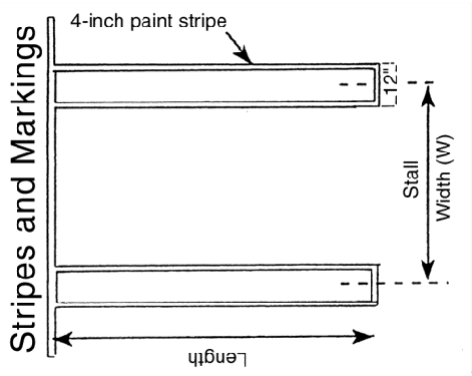

~~**Stripes and Markings**~~

~~**914.09.J Parking Access for Single-Unit Attached Residential Uses.**~~

~~**914.09.J.1 Single-Unit Attached Residential Uses Curb Cut Standards**~~

~~(a) Garages and parking spaces must be accessed from the rear yard, if rear yard access is available. Corner lots, with or without rear access, may alternatively access garages and parking spaces from the exterior side yard.~~

~~(b) In cases where front-loaded garage design is the remaining option, shared driveways with one (1) curb cut are encouraged.~~

~~**914.10. Off-Street Loading.**~~

~~The off-street loading requirement of this section shall apply to those developments of over two thousand four hundred (2,400) square feet in gross floor area.~~

~~**914.10.A Schedule of Off-Street Loading Requirements**~~

~~Off-street loading spaces shall be provided on the site of new or expanded uses, in accordance with the minimum standards included in the following off-street loading schedule.~~

~~**Floor Area**~~	~~**Minimum Off-Street Loading Requirement**~~

	~~Retail Sales and Service, Freight Terminal, Wareho Hospital, Nursing Home, Manufacturing Uses~~	~~Multi-Unit Residential, Hotel/Motel, Office, Restaurant, Assembly, Fur Home, Institutional Uses~~
~~2,401 to 20,000 s.f~~	~~1~~	1
~~20,001 to 50,000 s.f.~~	~~2~~	1
~~50,001 to 80,000 s.f.~~	~~3~~	1
~~80,001 to 120,000 s.f.~~	~~4~~	2
~~120,001 to 160,000 s.f.~~	~~5~~	2
~~160,001 to 200,000 s.f.~~	~~6~~	2
~~200,001 to 250,000 s.f.~~	~~7~~	3
~~250,001 +~~	~~7 + 1 per 45,000 s.f. above 250,000~~	~~3 + 1 per 150,000 s.f. abov 250,000~~

~~914.10.B Rules for Computing Off-Street Loading Requirements~~

~~The following rules shall apply when computing the number of off-street loading spaces required pursuant to the off-street loading schedule of Sec. 914.10.A.~~

~~914.10.B.1 Fractions~~

~~When calculation of the number of required offstreet loading spaces results in a fractional number, a fraction of less than one-half (½) shall be disregarded and a fraction of one-half (½) or more shall be rounded to the next highest whole number.~~

~~914.10.B.2 Multiple Uses~~

~~When two (2) or more uses or separate establishments are located within the same development, off-street loading shall be provided for each use or separate establishment according to the off-street loading schedule of Sec. 914.10.A. In the event that one (1) or more uses within a multi-use development are of a size that would otherwise exempt them from compliance with off-street loading requirements, only one (1) such exemption shall be permitted to be taken for the development.~~

~~914.10.B.3 Calculation of Floor Area~~

~~Unless otherwise stated, all square footage- based off-street loading standards shall be computed on the basis of gross floor area within the principal building.~~

~~914.10.B.4 New and Unlisted Uses~~

~~Upon receiving a development application for a use not specifically listed in the off-street loading schedule, the Zoning Administrator shall apply the off-street loading standards of the listed use that is deemed most similar to the use proposed.~~

~~914.10.C Loading Area Design and Improvement Standards~~

~~The design and improvement standards of this section shall apply to all off-street loading areas.~~

~~914.10.C.1 Surfacing~~

~~Areas used for off-street loading and circulation shall be surfaced with asphalt, concrete, masonry, hard packed slag, or other solid paving materials with sufficient strength to support the vehicle loads imposed. Loading areas shall be continuously maintained and designed to preclude free flow of storm water onto adjacent lots properties, or public streets or ways and in accordance with Title Thirteen: Stormwater Management, as applicable.~~

~~914.10.C.2 Landscaping and Screening~~

~~Off-street loading areas shall be screened from view in accordance with the Landscaping and Screening Standards of Chapter 918.~~

~~914.10.C.3 Lighting~~

~~Lighting shall be arranged and designed so that no source of light is directed toward any lots used or zoned for residential use. Lighting shall be designed to shield public streets and all other adjacent lands from distracting glare, or hazardous interference of any kind. Vehicular use areas shall not be lighted at any time other than the hours of operation of the use that the loading is intended to serve, except for necessary security lighting.~~

~~914.10.C.4 Loading Area Access~~

~~Loading areas shall be located and designed to ensure that entering and exiting vehicles do not disrupt vehicle and pedestrian circulation patterns.~~

~~914.10.C.5 Loading Area Dimensional Standards~~

~~(a) Minimum Standard~~

~~Each required off-street loading space shall be a minimum of ten (10) feet in width and twenty-five (25) feet in length, provided that a greater length shall be required whenever necessary to ensure that no vehicle using the space extends beyond a property line.~~

~~(b) Large Truck Standards~~

~~When the Zoning Administrator determines that off-street loading will involve the use of semi-tractor trailer combinations or other vehicles in excess of twenty-five (25) feet in length, the large truck (AWB-50 Design Vehicle) standards of this section shall apply.~~

~~Angle~~	~~Length (L)~~	~~Clearance (D)~~	~~Width (W)~~	~~Apron (AP)~~	~~T-Offset (T)~~
~~90°~~	~~55~~	~~55~~	~~10 12 14~~	~~77 72 67~~	~~132 127 122~~

~~60°~~	~~55~~	~~48~~	~~10 12 14~~	~~55 51 46~~	~~103 99 94~~
~~45°~~	~~55~~	~~39~~	~~10 12 14~~	~~45 40 37~~	~~84 79 76~~

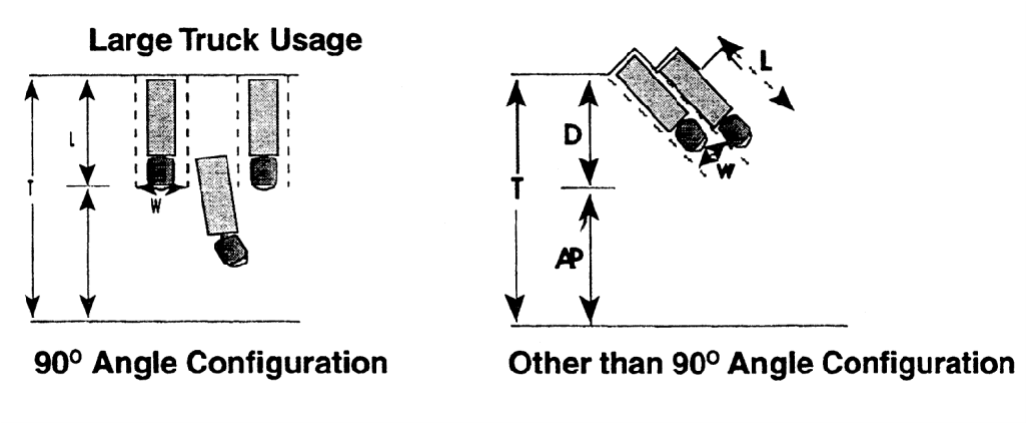

~~Loading Area Dimensional Standards~~

~~914.11. Exceptions to Off-Street Parking, Loading and Access Standards.~~

~~914.11.A Exceptions Authorized by the Zoning Board of Adjustment~~

~~The Zoning Board of Adjustment is authorized to grant the following as Special Exceptions, according to the Special Exception Review Procedures of Sec. 922.07.~~

~~914.11.A.1 Exceptions to Off-Street Parking Schedule~~

~~The minimum off-street parking standards of Parking Schedule A (Sec. 914.02.A) may be modified by the Zoning Board of Adjustment, provided that the following conditions are~~

~~met:~~

~~(a) The Zoning Board of Adjustment determines that such modification is consistent with the purpose and intent of this Zoning Code;~~

~~(b) The Zoning Board of Adjustment determines that such modification is:~~

~~(1) Necessary to develop a site that is severely affected by topographic constraints; or~~

~~(2) Is of a size, shape or dimension that cannot reasonably accommodate required off-street parking in accordance with Sec. 914.02.A; or~~

~~(3) Is located in an area where adequate off-street parking otherwise exists; or~~

~~(4) Is located in an area where additional parking would be undesirable.~~

~~(c) The Zoning Board of Adjustment determines that the applicant has requested approval of an Alternative Access and Parking Plan and been denied such approval or that such a request would not have been appropriate given the nature of the exemption requested;~~

~~(d) The Zoning Board of Adjustment imposes such conditions and limitations with respect to the proposed use and development of the premises as in its opinion are necessary in order to minimize the need for parking facilities and to make such automobile parking facilities as are provided reasonably adequate.~~

~~914.11.A.2 Parking Areas Accessory to Nonconforming Uses~~

~~Off-street parking or loading accessory to a nonconforming use on the same lot may be authorized by the Zoning Board of Adjustment, provided all of the following conditions are met:~~

~~(a) The parking or loading area complies with the property development standards of the underlying zoning district;~~

~~(b) The parking area or loading space is not provided for the purpose now or in the future~~ of replacing parking or loading space within a structure in order to allow extensions ~~or enlargements of the nonconforming use;~~

~~(c) The Zoning Board of Adjustment determines that the requested parking space or loading space is reasonably necessary and essential for the operation of the nonconforming use;~~

~~(d) Reasonable safeguards are established against possible detriment to neighboring properties, including those with respect to sanitation, noise, traffic movement, general safety and amenity; and~~

~~(e) The accessory parking or loading space may be continued only so long as the principal nonconforming use remains.~~

~~914.11.B Exceptions Authorized by the Zoning Administrator~~

~~The following exceptions to otherwise applicable standards may be authorized by the Zoning Administrator.~~

~~914.11.B.1 Exceptions to Parking and Loading Area Dimensional Standards~~

~~Minor reductions of standard size aisle and stall dimensions may be authorized by the Zoning Administrator, provided that the following conditions are met:~~

~~(a) The applicant demonstrates to the satisfaction of the Zoning Administrator that~~ dimensional problems are unique to the dimensions of the land parcel or parcels and ~~not due to decisions by the applicant;~~

~~(b) Proposed reductions shall be limited to the minimum necessary to provide the relief~~ required;

~~(c) The applicant submits acceptable engineering and architectural drawings showing all~~ proposed dimensions and geometry of the site and the parking and loading facilities; ~~and~~

~~(d) The Zoning Administrator shall certify that the proposed reduction in standard size aisle and bay dimensions will neither create safety hazards nor cause traffic congestion. The Zoning Administrator may require the submittal of an acceptable~~ Traffic Operations and Management Plan to assure the maintenance of public safety ~~and minimization of traffic congestion.~~

~~914.11.B.2 Exceptions to Off-Street Loading Schedule~~

~~The Zoning Administrator may authorize an exception to the off-street loading standards of Sec. 914.10.A, provided that the Zoning Administrator determines that projected vehicular service volumes do not warrant the provision of the number of off-street loading spaces otherwise required and that such volume will not cause undue interference with the public use of streets or ways, nor imperil public safety.~~

~~914.11.B.3 Shared and Off-Site Loading~~

~~The Zoning Administrator shall be authorized to approve off-site and shared loading arrangements where deemed appropriate, provided that the following conditions are met:~~

~~(a) There shall be filed with the application, a plan which will clearly indicate the accessibility of the loading spaces to the structures or uses to be served;~~

~~(b) The Zoning Administrator determines that joint use of the common loading area is feasible and there is not likely to be conflict in the time of use of such facility; and~~

~~(c) An attested copy of the agreement between the owners of record shall be submitted to County Recorder's Office for recordation on forms made available in the office of the Zoning Administrator. Proof of recordation of the agreement shall be presented to the Zoning Administrator prior to issuance of a building permit. An off-site or shared loading agreement may be revoked by the parties~~

~~to the agreement only if off-street loading is provided on-site pursuant to Sec. 914.10.A.~~

~~**914.11.B.4 Exception to Off-Street Parking Requirements for Infill Housing**~~

~~The Zoning Administrator may authorize an exception to the off-street parking requirements for Single-Unit Detached and Two-Unit residential uses provided that the following conditions are met:~~

~~(a) The lot size is less than two thousand five hundred (2,500) square feet;~~

~~(b) Off-street parking cannot be provided on-site without violation of the setback~~ requirements;

~~(c) The Administrator determines that the location, configuration and design of the parking area would be undesirable for the development of the structure and the adjacent and abutting properties; and~~

~~(d) The Administrator determines that there is sufficient on-street parking to address the~~ demand of the proposed use.

CHAPTER 914: PARKING, LOADING, AND ACCESS

914.01. General.

914.01.A Purpose

The purpose of these regulations is to:

1. Allow flexibility in addressing vehicle parking, loading, and access issues;
2. Present a menu of strategies to address mobility issues rather than parking space requirements;
3. Maintain and enhance a safe and efficient transportation system that is consistent with environmental and sustainability goals;
4. Ensure that off-street loading and access demands associated with new development will be met without adversely affecting, the adjacent right of way, other nearby land uses, and surrounding neighborhoods; and
5. Encourage reduction of surface and underutilized parking as a means of fostering more compact development patterns and encouraging multimodal circulation.

914.01.B Applicability

914.01.B.1 New Development

The parking, loading and access standards of this chapter shall apply to any new building constructed and to any new use established, in accordance with the standards of this chapter.

914.01.B.2 Expansions and Alterations

The parking, loading and access standards of this chapter shall apply when an existing structure or use is expanded or enlarged. Computation of the maximum allowed parking; minimum required bicycle parking; and minimum required loading shall be based on the enlarged or expanded area or use, not the entire building or use.

914.01.B.3 Change of Occupancy

Off-street parking and loading facilities for any change of occupancy shall comply with the Off-Street Parking Schedule of Sec. 914.02.A and the Off-Street Loading Schedule of Sec. 914.08.

a) If the change in use increases the maximum permitted number of parking spaces, additional parking spaces may be added provided the number of spaces provided does not exceed the maximum amount permitted.

b) If the change in use decreases the maximum permitted number of spaces, the applicant shall not be deemed noncompliant if the number of spaces proposed is greater than the maximum number of spaces permitted provided that the proposed number of spaces is equal to or less than the existing number of spaces.

c) If the change of use results in a requirement for more bicycle parking spaces and loading spaces than the existing or more recent use, additional bicycle parking spaces and loading spaces shall be required only in proportion to the extent of the change, not for the entire building or use.

914.01.C Exceeding the Maximum Number of Parking Spaces

In instances where the proposed number of parking spaces is in excess of stated maximum in 914.02.A., the applicant will be required to pay into the City of Pittsburgh Mobility Improvement Trust per parking space exceeding the maximum amount at a rate set by the City.

914.02. Off-Street Parking Schedules

914.02.A Maximum Parking Schedule

Off-street parking spaces shall be limited to no more than the maximum standards included in the Parking Schedule. The Zoning Administrator shall determine to which land use category each proposed use shall conform. The Maximum Off-Street Parking schedule has two categories, one for Zoning Lots within the Pittsburgh Regional Transit (PRT) Frequent Service Walkshed and one for all other parcels. Where less than 50% of a Zoning Lot is within the Frequent Service Walkshed, it shall be considered outside the Frequent Service Walkshed. The Frequent Service Walkshed shall be identified on the City's Zoning Map.

Land Use Category	Parking Max, Outside the PRT Frequent Service Walkshed	Parking Max, Within the PRT Frequent Service Walkshed
Single-Unit Residential, Detached	4 per Dwelling Unit	4 per Dwelling Unit
Single-Unit Residential, Attached	4 per Dwelling Unit	2 per Dwelling Unit
Two-Unit Residential	2 Per Dwelling Unit	2 per Dwelling Unit

Three-Unit Residential	2 Per Dwelling Unit	2 per Dwelling Unit
Multi-unit Residential	2 per Dwelling Unit	1 per Dwelling Unit
Office	1 per 300 SF	1 per 500 SF
Commercial	1 per 175 SF	1 per 500 SF
Hotel	1.25 per guest room	1 per guest room
Institutional	1 per 300 SF	1 per 800 SF
Laboratory/Research Service	1 per 200 SF	1 per 500 SF
Industrial & Warehouse	1 per 1,000 SF	1 per 1,500 SF

914.02.B Unlisted Uses

The Zoning Administrator shall establish the maximum parking required for any use or use category that does not fall into one of the use categories listed in this chapter. The Zoning Administrator may consider, but shall not be limited to, the following in establishing requirements for an unlisted use:

(1) Documentation regarding the actual parking and loading demand for the proposed use.

(2) Evidence in available planning and technical studies relating to the proposed use.

(3) Examination of the parking and loading requirements for uses most similar to the proposed use.

914.02.C Frequent Service Walkshed Zone

Within the PRT frequent service walkshed zone, parking maximums shall be lower as per the Maximum Parking Schedule. The Zoning Administrator shall work with PRT to update this data as necessary. The Zoning Administrator, in consultation with the Director of the Department of Mobility and Infrastructure, may grant an exemption to the more stringent parking maximums where topography, lack of safe sidewalks, or other factors make the access by transit less than the walkshed zone otherwise illustrates.

914.02.D Structured Parking Required

1. After enactment of this ordinance, surface parking areas exceeding 25 spaces shall be permitted in Specially Planned Districts only when approved by a phasing plan in the Preliminary Land Development Plan. All other parking areas exceeding 25 spaces shall be structured parking.
2. All primary and accessory off-street parking uses in the EMI Districts, where more than 75 spaces are provided, shall comply with the following requirements:

   (a) Surface parking shall be permitted for no more than 75 spaces;

   (b) All parking in excess of 75 spaces shall be structured;

   (c) In no case shall an accessory surface parking area or parking structure occupy more

than half the lot area of the lot containing the principal use that the parking area or structure serves.

3. As per 905.04.I, surface parking is limited to 25 spaces in the RIV-MU, RIV-IMU, and the RIV-GI. Surface parking is prohibited in the RIV-NS.

4. As per 912.03.(7)c, surface parking is prohibited in the GT, RIV-NS, UC-E, and UC-MU, except as provided in 904.08.B.2.

914.03. Rules for Computing Requirements.

The following rules shall apply when computing the maximum number of spaces pursuant to the Parking Schedule (Sec. 914.02.A).

914.03.A Fractions

When the calculation of the maximum number of off-street parking spaces results in a fractional number, a fraction of less than one-half (½) shall be disregarded and a fraction of one-half (½) or more shall be rounded to the next highest whole number.

914.03.B Multiple Uses or Activities

Where there are 2 or more separate Primary Uses on a Zoning Lot, the maximum allowed parking for each use shall be summed and the total shall be the maximum for the entire Zoning Lot.

914.03.C Calculation of Floor Area

Unless otherwise stated, all square footage-based maximum off-street parking standards shall be computed on the basis of Gross Floor Area within the principal building.

914.04. Bicycle Parking

This section seeks to ensure the proper provision of on-site bicycle parking and amenities needed to support multimodal trips to new development.

914.04.A Special Definitions

1. Bicycle Parking Space means a 4 feet by 6 feet space provided for locking up to 2 bicycles to a City approved Bicycle Rack or a bicycle locker that can store up to two 2 bicycles per unit.

2. Bicycle Rack means a stationary device with a base that can wedge anchors for surface mounting, provides steel tubing 1 inch to 4 inches thick, containing locking points between 1 foot and 3 feet off the ground and a gap near the bottom for pedal clearance, enabling one to lock a bicycle frame and 1 of the wheels with a standard U-Lock. Such a rack must be able to accommodate at least 2 bicycles upright by rack frame.

3. Protected Bicycle Parking Spaces are secure facilities which protect the entire bicycle, its components and accessories against theft and against inclement weather, including wind-driven rain. This type of facility includes, but is not limited to bicycle lockers, check-in facilities, monitored bicycle parking, restricted access parking, and personal storage.

4. Unprotected Bicycle Parking Spaces are Bicycle Racks which permit the locking of the

bicycle frame and 1 wheel to the rack and which support the bicycle in a stable position without damage to wheels, frame or components.

5. Low Occupancy Facility means a building or use with limited customer or non-employee contact and less than 1 employee per every 10,000 square feet of gross floor area.

914.04.B Locations and Facilities

1. Bicycle parking shall be provided in a well-lighted area.

2. Bicycle parking shall be located in a convenient and easily accessible location with safe and convenient means of ingress and egress to bicycle parking facilities. At least 50 percent of bicycle parking spaces shall be accessible without requiring the use of stairs or an elevator from a primary or secondary entrance to the building or parking structure.

3. Bicycle Parking facilities shall not interfere with accessible paths of travel or accessible parking as required by the Americans with Disabilities Act of 1990.

4. Protected and Unprotected Bicycle Racks shall be located in highly visible areas to minimize theft and vandalism.

5. In cases of protected bicycle rooms, at least 50% of the bicycle parking spaces shall be flush ground mounted.

6. Alternative Locations and Facilities. In the event that compliance with Section 914.04.B or 914.04.C may not be feasible or ideal because of demonstrable hardship or due to a creative design alternative, the Zoning Administrator in consultation with DOMI may approve an alternative storage location or alternative compliance. The Zoning Administrator shall be guided by the following criteria:

   a. Such alternative facilities shall be well-lighted and secure.

   b. All Bicycle Parking Spaces outside of a building shall be located within a 100 foot diameter of the primary building entrance.

   c. Bicycle Racks may be placed in the public right-of-way provided that the building owner attains an encroachment permit for the installation of racks in the public right-of-way from the Department of Mobility and Infrastructure. Any bicycle racks placed in the public right-of-way shall be standard “u racks” in accordance with DOMI bicycle parking standards.

914.04.C Layout of Spaces

Bicycle Parking Spaces shall be laid out according to the following:

1. All bicycle parking areas shall afford a 4 foot wide access aisle to ensure safe access to spaces.

2. Bicycle parking and automobile parking shall be located so as to protect bicycles from damage.

3. In cases where Bicycle Parking Spaces are not visible from the primary street, signage shall be used to direct cyclists safely to bicycle parking areas.

4. All Bicycle Racks and lockers shall be securely anchored to the ground or building structure.
5. Bicycle Parking Spaces shall not interfere with pedestrian circulation and shall adhere to ADA requirements.
6. Bicycle parking shall be an integral part of the overall site layout and designed to minimize visual clutter.

914.04.D Bicycle Parking Requirement

Unless otherwise stated, all square footage-based bicycle parking standards shall be computed on the basis of gross floor area within the principal building.

Bicycle Parking Spaces shall be provided in accordance with the following tables:

1. For all Non-Residential uses except, Hotel/Motel, Commercial Parking, Parking Structure, and Low Occupancy Facilities (as defined in Section 914.04.A.5):

Gross Floor Area	Required Minimum Number of Bicycle Parking Spaces
0-5,000 s.f.	1
5,001-10,000 s.f.	2
Over 10,000 s.f.	2 + 1 per 5,000 s.f. above 10,000 s.f.

2. For Residential:

Residential Use Type	Required Minimum Number of Bicycle Parking Spaces
Single-, Two-, and Three-unit Residential	0
Multi-unit Residential	1 per every 3 dwelling units or a fraction thereof

(a) At least sixty (60) percent of all bicycle parking spaces provided must be Protected Bicycle Parking Spaces.

(b) Senior Housing (as defined in Section 911.02) shall be permitted to reduce the required minimum number of bicycle parking spaces by up to 50%.

3. For Commercial Parking and Parking Structure uses:

Number of Automobile Spaces	Required Minimum Number of Bicycle Parking Spaces
0-3	0
4-20	1

21-40	2
Over 40	1 per every 10 spaces or a fraction thereof

4. For Low Occupancy Facilities and Hotel/Motel uses:

Number of Employees	Required Minimum Number of Bicycle Parking Spaces
0-5	0
6-20	1
21-80	2
Over 80	1 per every 20 employees or a fraction thereof

(a) To certify a building or use as a Low Occupancy Facility, the building owner or applicant shall attach to any zoning application, an affidavit attesting to the number of employees required for the use.

(b) When calculating the minimum number of Protected and/or Unprotected parking spaces required results in a fractional number, a fraction of less than one-half (½) shall be disregarded and a fraction of one-half (½) or more shall be rounded to the next highest whole number.

914.05. Accessible Parking

1. Accessible parking spaces shall be provided in accordance with Title Ten: Building, including quantity, dimensions, and vertical clearances.

2. For newly constructed structures or new developments not including structures, such as open space uses, without onsite parking but with available on street, at curb parking, an applicant shall work with the Department of Mobility and Infrastructure to determine if an ADA accessible space shall be designated within a reasonable distance from the entrance of the building that provides an accessible route to the building entry.

914.06. Queuing for Drive-Through Facilities.

Drive-through facilities shall comply with the following standards.

914.06.A Queue Space Schedule

The applicant shall submit a study that provides analysis and justification for the proposed number of queueing spaces to be provided. Studies shall document the source of data used to develop the recommendations. The Zoning Administrator, in consultation with the Department of Mobility and Infrastructure, will review the submitted study along with any other traffic engineering and planning data that are appropriate and establish the queueing required.

914.06.B Minimum Dimensions

Each queue space shall be a minimum of 10 feet by 20 feet in size.

914.06.C Design

Each queue lane shall be clearly defined and designed so as not to conflict or interfere with other pedestrian or vehicular traffic using the site.

914.07. Parking Area Location and Design.

The location, design and improvement standards of this section shall apply to all off-street parking areas containing 5 or more parking spaces. The Zoning Administrator may authorize an exception for minor deviation(s) to the standards of this section pursuant to 914.09.A.1.

914.07.A General Design Principles

914.07.A.1 Location

Off-street parking areas shall be located so as to minimize their adverse impact on the visual environment. To the maximum extent possible, off-street parking areas shall not be visible from a public street, and in no case shall a surface parking lot in any nonresidential zoning district be located within 10 feet of the street right-of-way.

914.07.A.2 Layout

There shall be safe, adequate, and convenient arrangement of pedestrian pathways, bikeways, roads, driveways, and off-street parking and loading spaces within off-street parking areas. Streets, pedestrian walks, parking areas, and open space shall be designed as integral parts of an overall site design which shall be properly related to existing and proposed buildings, adjacent uses, landscaped areas, and stormwater management features.

914.07.B Surfacing

Areas used for off-street parking, circulation or vehicle display shall be surfaced with asphalt, concrete, masonry, hard packed slag, permeable paving, or other solid paving materials with sufficient strength to support the vehicle loads imposed. For parking areas with 4 or fewer parking spaces, the Zoning Administrator shall be authorized to approve the use of an alternative surface material not listed above. All off-street parking and other vehicle circulation areas shall be continuously maintained and designed to preclude free flow of stormwater onto adjacent lots, properties, or public streets or ways and in accordance with Title Thirteen: Stormwater Management, as applicable.

914.07.C Wheel Stops

Wheel stops or curbing shall be installed to protect walls, poles, structures, pedestrian walkways or landscaped areas. Wheel stops should be placed within 2 to 3 feet from the end of parking spaces.

914.07.D Landscaping and Screening

Off-street parking, loading and vehicle display areas shall be landscaped and screened from view in

accordance with the Landscaping and Screening Standards of Chapter 918.

914.07.E Lighting

Lighting shall be arranged and designed so that no source of light is directed toward any lots used or zoned for residential use. Lighting shall be designed to shield public streets and all other adjacent lands from distracting glare, or hazardous interference of any kind. Vehicular use areas shall not be lighted at any time other than the hours of operation of the use that the parking is intended to serve, except for necessary security lighting.

914.07.F Parking Area Access

Access to parking garages and parking areas containing more than 5 spaces shall be designed to ensure that entering and exiting vehicles do not disrupt vehicle and pedestrian circulation patterns. At a minimum, all garage doors, ticket machines or entrance gates shall be located so as to allow a minimum of 20 feet clearance from sidewalks and street rights-of-way. Driveways serving such parking areas shall be located at least 60 feet from the point of intersection of curb lines of 2 or more intersecting streets, except as allowed under 914.09.A.1. Joint access to abutting parcels shall be provided wherever practical.

914.07.G Parking Structure Design

914.07.G.1 Screening of Vehicles

Parked vehicles shall be screened from view of adjacent streets and residential zoning districts to the maximum extent feasible.

914.07.G.2 Ground-Floor Uses

(a) For parking structures greater than 150 feet in length that are adjacent to store- front commercial uses, active uses shall be located along a minimum of 50 percent of the length of the street-side, street-level perimeter. For the purposes of this Section, active uses shall include commercial, residential, and accessory uses and activities that typically have user-occupied areas that are expressed through building fenestration and articulation.

(b) Within the RIV District, any ground-level structured parking that has primary frontage along the riverfront or along a street or publicly accessible pedestrian easement shall be screened architecturally or be screened according to the provisions of Section 918.03.B.

914.07.G.3 Building Lines

Parking structures shall present a horizontal rather than sloped building line on visible facades.

914.07.G.4 Accessible Parking, Ground Floor Vehicle Entrances

Parking structures containing more than one (1) floor shall meet the dimensional requirements (width and vertical clearances) of Title Ten: Building.

914.07.H Parking Stall Dimensional Standards

The following minimum dimensional standards shall apply to all off-street parking areas, except as

provided for Valet Parking in 914.07.I. The Exceptions to Parking Area Location and Design Standards of 914.09.A.1 shall not apply to the Parking Stall Dimension Standards of this section.

914.07.H.1 Standard-Size Parking Stalls

A minimum of sixty (60) percent of provided off-street parking spaces shall be standard-size spaces, designed in accordance the following minimum dimensional standards. All dimensions are measured in feet.

A = angle of parking	**90°**	**80°**	**75°**	**70°**	**65°**	**60°**	**55°**	**50°**	**45°**
W = width of stall parallel to aisle	8.50	8.63	8.80	9.05	9.38	9.81	10.38	11.10	12.02
W^1 = width of stall perpendicular to stall	8.50	8.50	8.50	8.50	8.50	8.50	8.50	8.50	8.50
Y = stall length offset	0.00	1.50	2.28	3.09	3.96	4.91	5.95	7.13	8.50
X = stall line length	19.00	20.50	21.28	22.09	22.96	23.91	24.95	26.13	27.50
L = stall depth perpendicular to wall	19.00	20.19	20.55	20.76	20.81	20.70	20.44	20.02	19.45
L^1 = stall length	19.00	19.00	19.00	19.00	19.00	19.00	19.00	19.00	19.00
AW = aisle width	24.00	21.00	19.75	18.50	17.25	16.00	14.75	13.50	12.25
IL = stall depth	19.00	19.45	19.45	19.31	19.02	18.58	18.00	17.29	16.44
BW = module, wall to wall	62.00	61.37	30.86	60.02	58.87	57.41	55.63	53.54	51.15
BWI = module, wall to interlock	62.00	60.64	59.76	58.57	57.08	55.28	53.19	50.81	48.14
BI = module, interlocking	62.00	59.90	58.66	57.12	55.28	53.16	50.75	48.07	45.13
BIC = module, interlock to curb face	59.50	58.14	57.26	56.07	54.78	52.98	50.89	48.81	46.14
I = bumper overhang	2.50	2.50	2.50	2.50	2.00	2.00	2.00	2.00	2.00
J = offset	0.00	0.26	0.59	1.06	1.68	2.45	3.41	4.58	6.01
K = setback	0.00	3.30	4.92	6.50	8.03	9.50	10.09	12.21	13.44
B = cross aisle, one-way	16.00	16.00	16.00	16.00	16.00	16.00	16.00	16.00	16.00
B1 = cross aisle, two-way	24.00	24.00	24.00	24.00	24.00	24.00	24.00	24.00	24.00

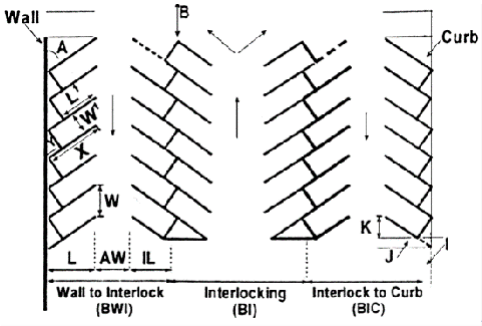

Standard Size Parking Stalls

914.07.H.2 Compact-Size Parking Stalls

Up to forty (40) percent of provided off-street parking spaces may be compact-size spaces, which shall be designed in accordance the following minimum dimensional standards. Compact-size spaces shall be clearly identified by pavement markings. All dimensions are measured in feet. Any calculation that results in a fraction shall be rounded down. Where one or two off-street parking spaces are provided, these spaces must be standard sized.

A = angle of parking	**90°**	**80°**	**75°**	**70°**	**65°**	**60°**	**55°**	**50°**	**45°**
W = width of stall parallel to aisle	7.75	7.87	8.02	8.25	8.55	8.95	9.46	10.12	10.95
W^1 = width of stall perpendicular to stall	7.75	7.75	7.75	7.75	7.75	7.75	7.75	7.75	7.75
Y = stall length offset	0.00	1.37	2.08	2.82	3.61	4.47	5.43	6.50	7.75
X = stall line length	16.50	17.87	18.58	19.32	20.11	20.97	21.93	23.00	24.25
L = stall depth perpendicular to wall	16.50	17.60	17.94	18.16	18.23	18.16	17.96	17.62	17.15
L^1 = stall length	16.50	16.50	16.50	16.50	16.50	16.50	16.50	16.50	16.50
AW = aisle width	20.00	17.50	16.64	15.78	14.92	14.06	13.20	12.34	11.48

powered by Legistar™

IL = stall depth	16.50	16.92	16.94	16.83	16.59	16.23	15.74	15.13	14.41
BW = module, wall to wall	53.00	52.69	52.53	52.09	51.38	50.39	49.12	47.58	45.77
BWI = module, wall to interlock	53.00	52.02	51.52	50.77	49.74	48.45	46.90	45.09	43.03
BI = module, interlocking	53.00	51.34	50.52	49.44	48.10	46.51	44.68	42.60	40.29
BIC = module, interlock to curb face	50.50	49.52	49.02	48.27	47.44	46.15	44.60	43.09	41.03
I = bumper overhang	2.50	2.50	2.50	2.50	2.30	2.30	2.30	2.00	2.00
J = offset	0.00	0.24	0.54	0.96	1.53	2.24	3.11	4.18	5.48
K = setback	0.00	2.87	4.27	5.64	6.97	8.25	9.46	10.61	11.67
B = cross aisle, one-way	12.00	12.00	12.00	12.00	12.00	12.00	12.00	12.00	12.00
B1 = cross aisle, two-way	20.00	20.00	20.00	20.00	20.00	20.00	20.00	20.00	20.00

914.07.I Valet Parking

Valet parked lots shall not be subject to the dimensional requirements of this Section. However, all maneuvering to retrieve automobiles must be out of the public right of way. Valet service pick up and drop off in the public right of way is subject to Title Five: Traffic of the City Code.

914.07.J Parking Access for Single-Unit Attached Residential Uses.

914.07.J.1 Single-Unit Attached Residential Uses Curb Cut Standards

(a) Garages and parking spaces must be accessed from the rear yard, if rear yard access is available. Corner lots, with or without rear access, may alternatively access garages and parking spaces from the exterior side yard.

(b) In cases where front-loaded garage design is the remaining option, shared driveways with one (1) curb cut are encouraged.

914.08. Off-Street Loading.

The off-street loading requirement of this section shall apply to those developments of over two thousand four hundred (2,400) square feet in gross floor area.

914.08.A Schedule of Off-Street Loading Requirements

Off-street loading spaces shall be provided on the site of new or expanded uses, in accordance with the minimum standards included in the following off-street loading schedule.

Floor Area	Minimum Off-Street Loading Requirement

	Retail Sales and Service, Freight Te Hospital, Assisted Living, Manufactu	Multi-Unit Reside Hotel/Motel, Offic Restaurant, Assem Home, Institutiona
2,401 to 20,000 s.f	1	1
20,001 to 50,000 s.f.	2	1
50,001 to 80,000 s.f.	3	1
80,001 to 120,000 s.f.	4	2
120,001 to 160,000 s.f.	5	2
160,001 to 200,000 s.f.	6	2
200,001 to 250,000 s.f.	7	3
250,001 +	7 + 1 per 45,000 s. 250,000	3 + 1 per 150,000 250,000

914.08.B Rules for Computing Off-Street Loading Requirements

The following rules shall apply when computing the number of off-street loading spaces required pursuant to the off-street loading schedule of Sec. 914.08.A.

914.08.B.1 Fractions

When calculation of the number of required off-street loading spaces results in a fractional number, a fraction of less than one-half (½) shall be disregarded and a fraction of one-half (½) or more shall be rounded to the next highest whole number.

914.08.B.2 Multiple Uses

When two (2) or more uses or separate establishments are located within the same development, off-street loading shall be provided for each use or separate establishment according to the off-street loading schedule of Sec. 914.08.A. In the event that one (1) or more uses within a multi-use development are of a size that would otherwise exempt them from compliance with off-street loading requirements, only one
(1) such exemption shall be permitted to be taken for the development.

914.08.B.3 Calculation of Floor Area

Unless otherwise stated, all square footage- based off-street loading standards shall be computed on the basis of gross floor area within the principal building.

914.08.B.4 New and Unlisted Uses

Upon receiving a development application for a use not specifically listed in the off-street loading schedule, the Zoning Administrator shall apply the off-street loading standards of the listed use that is deemed most similar to the use proposed.

914.08.C Loading Area Design and Improvement Standards

The design and improvement standards of this section shall apply to all off-street loading areas.

914.08.C.1 Surfacing

Areas used for off-street loading and circulation shall be surfaced with asphalt, concrete, masonry, hard packed slag, permeable paving, or other solid paving materials with sufficient strength to support the vehicle loads imposed. Loading areas shall be continuously maintained and designed to preclude free flow of storm water onto adjacent lots properties, or public streets or ways and in accordance with Title Thirteen: Stormwater Management, as applicable.

914.08.C.2 Landscaping and Screening

Off-street loading areas shall be screened from view in accordance with the Landscaping and Screening Standards of Chapter 918.

914.08.C.3 Lighting

Lighting shall be arranged and designed so that no source of light is directed toward any lots used or zoned for residential use. Lighting shall be designed to shield public streets and all other adjacent lands from distracting glare, or hazardous interference of any kind. Vehicular use areas shall not be lighted at

any time other than the hours of operation of the use that the loading is intended to serve, except for necessary security lighting.

914.08.C.4 Loading Area Access

Loading areas shall be located and designed to ensure that entering and exiting vehicles do not disrupt vehicle and pedestrian circulation patterns.

914.08.C.5 Loading Area Dimensional Standards

(a) Minimum Standard

Each required off-street loading space shall be a minimum of ten (10) feet in width and twenty-five (25) feet in length, provided that a greater length shall be required whenever necessary to ensure that no vehicle using the space extends beyond a property line.

(b) Large Truck Standards

When the Zoning Administrator determines that off-street loading will involve the use of semi - tractor trailer combinations or other vehicles in excess of twenty-five (25) feet in length, the large truck (AWB-50 Design Vehicle) standards of this section shall apply.

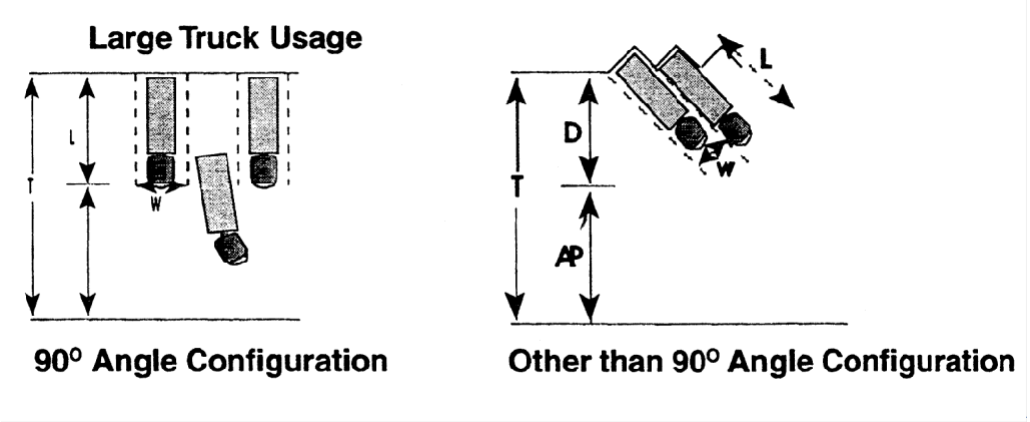

Angle	Length (L)	Clearance (D)	Width (W)	Apron (AP)	T-Offset (T)
90°	55	55	10 12 14	77 72 67	132 127 122
60°	55	48	10 12 14	55 51 46	103 99 94
45°	55	39	10 12 14	45 40 37	84 79 76

Loading Area Dimensional Standards

914.09. Exceptions to Off-Street Parking, Loading and Access Standards.

914.09.A Exceptions Authorized by the Zoning Administrator

The following exceptions to otherwise applicable standards may be authorized by the Zoning Administrator.

914.09.A.1 **Exceptions to Parking Area Location and Design Standards**

The Zoning Administrator, in consultation with the Director of the Department of Mobility and Infrastructure, may authorize an exception to the Parking Area Location and Design Standards of Section 914.07, provided that the following conditions are met:

(a) **The applicant demonstrates to the satisfaction of the Zoning Administrator that location and design problems are unique to the dimensions or topography of the land parcel or parcels and not due to decisions by the applicant;**

(b) **Proposed deviation(s) from the standards in 914.07 shall be limited to the minimum necessary to provide the relief required and shall not include exceptions to parking stall dimensional requirements;**

(c) **The applicant submits acceptable engineering and architectural drawings showing all proposed dimensions and geometry of the site and the parking and loading facilities; and**

(d) **The Zoning Administrator shall certify that the proposed deviation(s) from the parking area location and design standards will neither create safety hazards nor cause traffic congestion. The Zoning Administrator may require the submittal of an acceptable**

Traffic Operations and Management Plan to assure the maintenance of public safety and minimization of traffic congestion.

914.09.A.2 **Exceptions to Off-Street Loading Schedule**

The Zoning Administrator, in consultation with the Director of the Department of Mobility and Infrastructure, may authorize an exception to the off-street loading standards of Sec. 914.08.A, provided that the Zoning Administrator determines that projected vehicular service volumes do not warrant the provision of the number of off-street loading spaces otherwise required and that such volume will not cause undue interference with the public use of streets or ways, nor imperil public safety.

914.09.A.3 **Shared and Off-Site Loading**

The Zoning Administrator, in consultation with the Director of the Department of Mobility and Infrastructure, shall be authorized to approve off-site and shared loading arrangements where deemed appropriate, provided that the following conditions are met:

(a) **There shall be filed with the application, a plan which will clearly indicate the accessibility of the loading spaces to the structures or uses to be served;**

(b) **The Zoning Administrator determines that joint use of the common loading area is feasible and there is not likely to be conflict in the time of use of such facility;**

914.09.A.4 **Exceptions to Loading Area Design and Improvement Standards**

The Zoning Administrator, in consultation with the Director of the Department of Mobility and Infrastructure, may authorize an exception to the Loading Area Design and Improvement Standards of Section 914.08.C, provided that the following conditions are met:

(a) **The applicant demonstrates to the satisfaction of the Zoning Administrator that location and design problems are unique to the dimensions or topography of the land parcel or parcels and not due to decisions by the applicant;**

(b) **Proposed deviation(s) from the standards in 914.08.C shall be limited to the minimum necessary to provide the relief required;**

(c) **The applicant submits acceptable engineering and architectural drawings showing all proposed dimensions and geometry of the site and the parking and loading facilities;**

(d) **The Zoning Administrator shall certify that the proposed deviation(s) from the loading area design and improvement standards will neither create safety hazards nor cause traffic congestion. The Zoning Administrator may require the submittal of an acceptable Traffic Operations and Management Plan to assure the maintenance of public safety and minimization of traffic congestion; and**

(e) **An exception to the off-street loading requirements shall not include the request to provide an on-street loading zone to meet the loading demand of the site.**

914.10. Transportation Demand Management.

914.10.A Purpose

The purpose of the Transportation Demand Management (TDM) is to support the city's development while minimizing its impact to Pittsburgh's transportation system. It ensures that larger developments and uses with high mobility demand have positive impacts on safety, equity, mobility options, climate change, greenhouse gas emissions, mode split, and air quality.

914.10.B. Applicability

1. **Multi-unit residential developments with 11 or more dwelling units or group residential uses with 11 or more sleeping rooms.**
2. **Non-residential Uses with a Gross Floor Area of 10,000 square feet or greater.**
3. **Mixed-use development when either the residential use or the non-residential use meets either of these thresholds.**

914.10.C. Calculation of TDM Requirements.

1. **The number of TDM points required for development project shall be in accordance with the following tables.**

Residential	Dwelling Units	TDM Points Required
Tier 1	11 to 75	10
Tier 2	76 to 150	15
Tier 3	151+	25

Non-ResidentialGross Floor AreaTDM Points Required		
Tier 1	10,000 to 30,000	10
Tier 2	30,001 to 50,000	15
Tier 3	50,001+	25

2. **The minimum number of TDM points required for mixed-use development containing both residential and non-residential uses shall be calculated by taking the sum of the total number of points required and reducing the sum by 25%.**
3. **The Zoning Administrator, in consultation with the Director of the Department of Mobility and Infrastructure, may require additional TDM mitigation measures for non-residential uses that generate greater traffic demand than average, including but not limited to, Public Assembly, Recreation and Entertainment, and School, Elementary or Secondary. To calculate the number of additional mitigation measures, the Zoning Administrator shall request:**
    a. **An estimated projection of the number of average daily trips generated by the use;**

b. **A detailed description of the types and frequency of events associated with the use; and**
c. **A projection of the maximum capacity of the facility.**

4. **The Zoning Administrator may grant Low Occupancy Facilities (as defined in 914.04.A) a reduction or exemption of the TDM points requirement. To apply for a reduction or exemption, the applicant shall provide as a part of the zoning application the following:**
   a. **An affidavit attesting to the number of employees required for the use; and**
   b. **An estimated projection of the number of average daily trips generated by the use.**

914.10.D. Affordable Housing Exemption.
Developments providing Affordable Housing with 20 or more units, where all units meet the Allowable Pricing criteria set forth in 902.04.A.3, shall be exempt from this requirement. Applicants are encouraged to meet the otherwise required amount of TDM points.

914.10.E. Program Requirements.
Any application meeting the applicability standards of 914.10.B. shall submit a TDM plan as part of the development submission.

1. **TDM Plan Submission and Approval. The applicant shall provide a Transportation Demand Management plan for review and approval by the Department of Mobility and Infrastructure. The TDM Plan must be approved prior to the issuance of a building permit or certificate of occupancy.**
2. **Mitigation Point Measures. To satisfy the mitigation points required in 914.10.C., the applicant may choose from a menu of mitigation measures as developed by the Department of Mobility and Infrastructure.**
3. **Plan Content. All TDM plans shall contain the following:**
   a. **The identity and contact information of the TDM Coordinator.**
   b. **Anticipated travel demand of the project.**
   c. **A description of the building, use, or addition subject to TDM requirements.**
   d. **The number of mitigation points required by this ordinance.**
   e. **Strategies employed to earn the number of mitigation points required intended to reduce single-occupancy vehicle trips, reduce vehicle miles traveled by site users, and promote transportation alternatives such as walking, cycling, ridesharing and transit.**
   f. **A statement acknowledging that periodic TDM monitoring is required.**
4. **Monitoring. The applicant or property owner shall permit city staff access to conduct periodic monitoring to ensure continued compliance with the approved TDM Plan. Monitoring may include access to relevant portions of the property to conduct site visits; inspection of physical improvements; and/or other empirical data collection; and facilitate in-person, phone, and/or email or web-based interviews with residents, tenants, employees, or visitors.**

914.10.F. Effective Date

The requirements of Section 914.10 Transportation Demand Management shall be effective six months from enactment of the ordinance.

Section 40. The Pittsburgh Code, Title Nine, Zoning Code, Article VI, Development Standards is hereby amended in Chapter 915.07, Performance Points System, as follows:

915.07. Performance Points System.

915.07.A Purpose
The City of Pittsburgh recognizes that communities that embrace innovation and livability while remaining affordable to all citizens will be more sustainable both in their demands on the environment and their ability to continue to grow and succeed over time. This set of incentives for development seeks to increase the provision of affordable housing, increase the number of green buildings constructed, and incent the retention of existing structures that represent the city's built heritage.

915.07.B Applicability
The following incentives are available within designated zoning districts that include the following elements:

1. Provision enabling use of this bonus system;
2. Bonus Goals and Points section specifying the points awarded for each option; and
3. Bonus section specifying how points earned through the incentives can be used.

915.07.C Definitions

1. Reserved.
2. 95th Percentile Rain Event shall mean the measured precipitation depth accumulated over a 24-hour period for the period of record that ranks in the 95th percentile rainfall depth based on the range of all daily event occurrences during this period.
3. Affordable Housing shall mean housing with a gross cost, including utilities, that does not exceed thirty (30) percent of the occupant's income.
4. Area Median Income (AMI) shall mean the average medium income of the metropolitan area (MSA) or Non-Metropolitan areas (counties) as established annually by the U.S. Department of Housing and Urban Development (HUD).
5. Building Energy Model (BEM) shall mean the use of a physics-based software simulation of building energy use. A BEM program takes as input a description of a building form and materials, the building's use and operation including schedules for occupancy, lighting, plug-loads, and thermostat settings, and combines these inputs with information about local weather and uses physics equations to calculate thermal loads, system response to those loads, and resulting energy use, along with related metrics like occupant comfort and energy costs.
6. Distributed Energy Systems shall mean a range of smaller-scale technologies designed to provide electricity and thermal energy closer to consumers. These approaches include fossil and renewable energy technologies, micro-grids, on-site energy storage, and combined heat and power systems. Technologies could include: existing district energy facilities combined heat and power systems, microgrids, fuel cells, and batteries.
7. Fresh Food Market shall mean an establishment (under Grocery Store - General) primarily engage in the sale of

grocery products and that provides all of the following:

i. At least five thousand (5,000) sq. ft. of customer-accessible floor area use for display and sales of a general line of food and nonfood grocery products such as dairy, canned and frozen foods, fresh fruits and vegetables, and fresh and prepared meats, fish, and poultry, intended for home preparation, consumption, and use;

ii. At least fifty (50) percent of such customer-accessible sales and display area is used for the sale of general line of food products intended for home preparation and consumption;

iii. At least twenty-five (25) percent of retail inventory by volume is in the form of perishable goods, which must include dairy, fresh fruits and vegetables, and frozen foods that may include fresh meats, poultry and fish; and

iv. At least twenty-five (25) percent of such customer-accessible sales and display area is used for the sale of fresh fruits and vegetables.

8. Green Infrastructure shall mean systems and practices that use or mimic natural processes to infiltrate, evapotranspire, or reuse stormwater on the site where it is generated.

9. On-Site Renewable Energy shall mean renewable sources, such as wind, solar, and co- generation, that are generated on the project site, thereby relieving reliance on the grid and providing alternative sources of electricity.

10. Native Plants shall mean plants indigenous to Western Pennsylvania. This includes plants that have developed or occurred naturally, excluding invasive species.

11. Networked Walkshed shall mean the land area within a defined walking range, traversable on established streets or pathways.

12. Rapid Services shall mean all modes of transit which use an exclusive right-of-way or have at least seventy-five (75) percent of route miles along a fixed guideway.

13. Preferred Stormwater Management Technologies shall mean stormwater management practices that can provide additional co-benefits, increased reliability, or better performance than other technologies. Preferred Stormwater Management Technologies must be in accordance with the City of Pittsburgh Stormwater Design Manual.

14. Local Workforce Group shall mean an organization that provides publicly available workforce development services, career training services, entrepreneurial services, or business incubation and startup services or a local, non-franchise business owned and operated by City of Pittsburgh resident.

15. Underrepresented Groups shall mean existing residents of the Pittsburgh Metropolitan Statistical Area with incomes at or below eighty (80) percent AMI; or lack a four-year degree; or reside in a City of Pittsburgh neighborhood with an unemployment rate that is more than double the City of Pittsburgh average.

915.07.D Bonus Goals and Points

1. Zero Energy or Zero Carbon Buildings		
1.a	Demonstrate compliance with Int Section C407 Total Building Perf 2019 Appendix G Building Perfo	1
1.b	Demonstrate compliance with Int Section C407 Total Building Perf 2019 Appendix G Building Perfo designed and constructed with no described in Zero Code 2.0.	2
1.c	Demonstrate compliance with Int Appendix CC: Zero Energy Com	3
2. Reserved		

3. On-Site Energy Generation		
At least one (1) point from Zero Energy or Zero Carbon Buildings required prior to using the On-Site Energy Generation points below.		
3.a	At least 25% of energy use is gen	1
3.b	At least 50% of energy use is gen	2
	Connecting to distributed energy	
3.c	75% or more of energy use is gen	3
4. Affordable Housing		
Available only to projects where at least 50% of the gross floor area is used for residential units.		
Points for options 4.c and 4.d below will only be awarded to development projects providing at least 20 housing units.		
4.a	At least 5-14.9% of units for rent below 80% AMI.	1
4.b	At least 5-14.9% of units for sale below 80% AMI; or	2
	At least 5-14.9% of units for rent below 60% AMI; or	
	At least 15-19.9% of units for ren below 80% AMI.	
4.c	**Meets the requirements of 902.0 the minimum unit threshold of**	3
	At least 15-19.9% of units for sal below 80% AMI; or	
	At least 15-19.9% of units for ren below 60% AMI; or	
	At least 20% or more of units for below 80% AMI.	

4.d20% or more of units for sale are affordable housing for persons at or below 80% AMI; or4		
	20% or more of units for rent are affordable housing for persons at or below 60% AMI.	
5. Rainwater		
All vegetated Green Infrastructure must use at least 50% Native Plants.		
5.a	At least 50% of the first two (2) inches of runoff from impervious surfaces is captured and managed using Preferred Stormwater Management Technology installations; or	1
	At least 15% of the first two (2) inches of runoff from impervious surfaces is captured and reused on-site.	
5.b	At least 75% of the first two (2) inches of runoff from impervious surfaces is captured and managed using Preferred Stormwater Management Technology installations; or	2
	At least 30% of the first two (2) inches of runoff from impervious surfaces is captured and reused on-site.	
5.c	100% or more of the first two (2) inches of runoff from impervious surfaces is captured and managed using Preferred Stormwater Management Technology installations; or	3
	45% of the first two (2) inches of runoff from impervious surfaces is captured and reused on-site.	
6. Building Reuse		
6.a	Exterior design of new development is compatible with nearby structures more than fifty (50) years old including the use of similar window and door sizes and materials, cladding materials, bays, cornices, and other Primary Structure elements.	1
6.b	At least 75% of street facing building facades from structures more than 50 years old are restored and integrated into new development.	2
6.c	Existing building shell is restored and retained.	3

7. Riverfront Public Access Easements, Trails and Amenities		
7.a	For parcels that abut the riverfront and are not separated by a right-of-way, provision of a riverfront public access easement held by the City of Pittsburgh of at least 20 feet in width and runs the entire length of the parcel's riverfront boundary.	1
7.b	For sites where no trail exists and a public easement has been made, construction of a trail that meets all City standards as well as national standards of Manual on Uniform Traffic Control Devices (MUTCD), and that connects to existing adjacent trails when feasible.	2
7.c	For sites where an existing trail is present and a public easement has been made, improvement of trail to City standards as well as national standards of Manual on Uniform Traffic Control Devices (MUTCD), and that connects to existing adjacent trails when feasible.	1
7.d	For sites where a riverfront or riverfront-adjacent trail is not feasible, development provides public access that allows for or contributes to continuous mobility parallel the riverfront.	2
7.e	Provision of public restrooms accessible from the public riverfront trail, open during expected hours of trail use.	2
7.f	Provision of public access easement and passageway built in accordance with Section 905.04.G.5(a) and (b), providing connections from public rights-of-way to the riverfront.	1
8. Neighborhood Ecology		
8.a	Ground-level surface parking area is designed so that a minimum of 50% of the total paved area is shaded by solar panels.	1
8.b	The top level of a parking structure is designed so that a minimum of 50% of the total area is shaded by solar panels.	1
9. Public Art		

The percent of estimated gross construction cost applied to public art includes artist engagement; design, fabrication and placement of art; insurance; and funds dedicated for ongoing maintenance.		
9.a	At least 1% of the estimated gross construction cost is applied directly to the creation and maintenance of on-site public art as defined by the URA's Public Art Resource Guide for Developers, OR made as a one-time contribution to the City's Public Art Fund for use by the City for art on publicly owned lands within the same neighborhood.	1
9.b	At least 2% of the estimated gross construction cost is applied directly to the creation and maintenance of on-site public art as defined by the URA's Public Art Resource Guide for Developers, OR made as a one-time contribution to the City's Public Art Fund for use by the City for art on publicly owned lands within the same neighborhood.	2
9.c	At least 3% of the estimated gross construction cost is applied directly to the creation and maintenance of on-site public art as defined by the URA's Public Art Resource Guide for Developers, OR made as a one-time contribution to the City's Public Art Fund for use by the City for art on publicly owned lands within the same neighborhood.	3
10. Urban Fabric		
10.a	Structured parking is designed to allow for conversion to other (non- parking) uses.	2
11. Transit-Oriented Development		
11.a	Site is within ½ mile networked walkshed of rapid service routes.	1
11.b	On-site transit station for rapid service routes, designed as an integral part of the development project and to meet Port Authority standards for transit stations.	3
12 Equitable Development		
12.a	Commitment to ensuring 10% of jobs in the building will be hired from Underrepresented Groups for the first 10 years the building is in operation and recertified by the City of Pittsburgh every two (2) years; or	1
	Contribution of a sum equal to $3 per rentable commercial square foot (RCSF) of the project into the City’s Equitable Development Trust Fund either in full or annually over a period not to exceed 10 years with a minimum of 25% of the total sum due at the time the project completes construction; or	

	A signed lease agreement between the applicant and a Local Workforce Group for a period not less than five (5) years.		
12.b .	Commitment to ensuring 20% of jobs in the building will be hired from Underrepresented Groups for the first 10 years the building is in operation and recertified by the City of Pittsburgh every two (2) years; or	2	
	Contribution of a sum equal to $4 per rentable commercial square foot (RCSF) of the project into the City's Equitable Development Trust Fund either in full or annually over a period not to exceed 10 years with a minimum of 25% of the total sum due at the time the project completes construction.		
12.c	Commitment to ensuring 30% of jobs in the building will be hired from Underrepresented Groups for the first 10 years the building is in operation and recertified by the City of Pittsburgh every two (2) years; or	3	
	Contribution of a sum equal to $5 per commercial square foot (RCSF) of the project into the City's Equitable Development Trust Fund either in full or annually over a period not to exceed 10 years with a minimum of 25% of the total sum due at the time the project completes construction.		
13 Fresh Food Access			

13.a	The building is designed and constructed, or a renovation of a building includes a Fresh Food Market as a tenant.	2

915.07.E Compliance and Enforcement

1. If a project is awarded a height or riparian buffer bonus pursuant to this subsection, the Developer shall provide the Department of City Planning with satisfactory evidence of having completed the procedures as developed by the Department of City Planning and the following steps in the process toward achieving the requirements of the bonus:

a. Zero Energy or Zero Carbon Buildings:

(1) Application and predesign phase: Submission of intent to comply with International Energy Conservation Code Section C407 Total Building Performance criteria or ASHRAE Standard 90.1- 2019 Appendix G Building Performance Rating Method and how the project intends to meet this requirement.

(2) Design completion and prior to construction: Provide design narrative and construction documents. A BEM will be required showing that the building is designed to comply with International Energy Conservation Code Section C407 Total Building Performance criteria or ASHRAE Standard 90.1- 2019 Appendix G Building Performance Rating Method.

(3) Construction completion and building occupancy: Provide final performance-based commissioning report and/or a building energy model reflecting the as-built condition showing International Energy Conservation Code Section C407 Total Building Performance criteria or

ASHRAE Standard 90.1- 2019 Appendix G Building Performance Rating Method.

(4) Following first-year operations completion: Provide proof of whole building energy consumption, verified with utility invoices or digital meter data for energy consumed and produced or third party verified by Professional Engineer or equivalent. ~~t.~~

b. Affordable housing

(1) All projects shall comply with On-Site Inclusionary Standards 904.02.A.5 ~~907.04.A.6 (e) through (j)~~.

(2) Application and predesign phase: Provide a matrix that documents the unit count and includes AMI of occupants. Identify in writing all subsidies and/or financing programs the project will utilize in the provision of affordable housing. Provide letters of commitment for any subsidies and/or financing secured.

(3) Design completion and prior to construction: Provide floor plans that identify housing unit types and location of amenities, entrances, and lobbies with American Disabilities Act (ADA) accessibility, and documenting compliance with On-Site Inclusionary Standards 904.02.A.5 ~~907.04.A.6 (e) through (j).~~ Provide letters of commitment for any subsidies and/or financing secured. Where letters of commitment are forthcoming, this requirement can be met by submitting the project for review by the Housing Department of the Urban Redevelopment Authority which will provide a memo to the Department of City Planning.

c. Rainwater

(1) Application and predesign phase: Provide a conceptual stormwater management plan in accordance with Title Thirteen: Stormwater Management and clearly identifying how the project will satisfy the bonus.

(2) Design completion and prior to construction: Provide a Stormwater Management Site Plan in accordance with Title Thirteen: Stormwater Management and clearly identifying how the project will satisfy the bonus.

(3) Construction completion and building occupancy: Provide documentation of completion of all Record Drawings, Completion Certificate, and Final Inspection requirements in accordance with Title Thirteen: Stormwater Management.

(4) Following first-year operations completion: Provide a performance-based report following one (1) year of operation that shows stormwater management installations are performing as specified in the project's Stormwater Management Site Plan and in accordance with Title Thirteen: Stormwater Management requirements.

d. On-Site Public Art:

(1) Application and predesign phase: Provide a preliminary public art plan that clearly identifies how the project will satisfy the bonus, including estimated gross construction cost, opportunities for inclusion of public art, and a plan for artist engagement.

(2) Design completion and prior to construction: The Department of City Planning will approve final plan for public art including a final budget, design of public art element(s), and proof of establishment of fund for ongoing maintenance.

(3) Construction completion and building occupancy: Provide Department of City Planning with

verification that art was installed as designed along with breakdowns and receipts of final project costs. If art was not installed as designed, provide narrative explanation of what alterations were made and why.

e. Equitable Development

(1) For projects providing the percentage employment from Underrepresented Groups, initial compliance report shall be submitted to the Department of City Planning no later than three (3) years following issuance of the Certificate of Occupancy and shall meet standards set by the Department of City Planning at the time of reporting. After that time, compliance reports must be submitted every two (2) years through the first ten (10) years the building is operational.

(2) For projects contributing to the City's Equitable Development Trust Fund per rentable commercial square foot (RCSF), seventy-five (75) percent of the structure's Gross Floor Area must contain commercial, non-residential uses. For purposes of this calculation, shared spaces shall be excluded from Gross Floor Area.

(3) If a building should be found at any point out of compliance with this Performance Point, the property owner shall beginning that year pay the fee per rentable commercial square foot (RCSF) option for the remainder of the ten (10) years from the date construction was completed. This bonus point shall be exempt from 915.07.E.2, however, the first payment shall be made to the Equitable Development Trust Fund within thirty (30) days of the documentation of non-compliance or the City shall have the authority to revoke the certificate of occupancy for the building.

f. Food Access

(1) A project which receives bonus points for the presence of a Fresh Food Market pursuant to Subparagraph 13(a) shall maintain such tenant or use for a period of at least ten (10) years from the issuance of a Certificate of Occupancy. The Fresh Food Market must be located on the ground floor of the structure and accessible through a separate entrance that must be located on the primary street frontage. At the time of application, no Fresh Food Market may be in operation within a 2,640-foot radius of the proposed project, as determined by the Department of City Planning.

2. If the project does not provide satisfactory evidence of achieving the performance standards of each used bonus within three (3) years of receiving its initial certificate of occupancy, then unless otherwise noted in this section, the property owner shall be subject to a fine equal to one (1) percent of the construction costs and shall provide a plan for compliance with the bonus point. If the plan is not submitted and the fine is not paid within thirty (30) days of the date it is imposed, then the City shall have the authority to revoke the certificate of occupancy for the building. If the project is not brought into compliance within one (1) year, then the City shall have the authority to revoke the certificate of occupancy for the building.

The following Performance Points shall have the compliance path as provided, if projects do not provide satisfactory evidence of achieving the performance standards of each used bonus at time of

final inspection.

For 3.b, Connecting to distributed energy systems only, the property owner shall be subject to a fine of two (2) percent of construction cost. If the fine is not paid within thirty (30) days of the date it is imposed, then the City shall have the authority to revoke the certificate of occupancy for the building.

Building Reuse

For 6.b and 6c., the property owner shall be subject to a fine of two (2) percent of construction cost. If the fine is not paid within thirty (30) days of the date it is imposed, then the City shall have the authority to revoke the certificate of occupancy for the building.

Urban Fabric

For 10a., the property owner shall be subject to a fine of two (2) percent of construction cost. If the fine is not paid within thirty (30) days of the date it is imposed, then the City shall have the authority to revoke the certificate of occupancy for the building.

Transit Oriented Development

(1) For 11.a, no fine shall be imposed, nor compliance required, under section 915.07.E.2 if rapid service routes are discontinued through no fault of the property owner.

Section 41. The Pittsburgh Code, Title Nine, Zoning Code, Article VI, Development Standards, is hereby amended at Chapter 916 Residential Compatibility Standards as follows:

916.01.C Exemptions

Notwithstanding the applicability statement of Sec. 916.01.B, the following shall be exempt from the Residential Compatibility Standards to the extent indicated:

1. Residential Compatibility Standards shall not be triggered by property that is public right-of -way, railroad track, roadway, median, or utility easement in an RSD, RSA, RT, RTS, RM, or H.
2. The following shall specifically be exempt from compliance with Residential Compatibility Standards:
    a. Development within the GT, Golden Triangle, Riverfront and Planned Development Districts;
    b. Structural alteration of an existing building when such alteration does not increase the building's square footage or height;
    c. A change in use that does not increase the number of off-street parking spaces ~~required (as shown in the Schedule of Off-Street Parking Standards, Sec. 914.02.A~~p

Section 42. The Pittsburgh Code, Title Nine, Zoning Code, Article VI, Development Standards, is hereby amended at Chapter 920 Child Care Regulations as follows:

920.02 - Floor Area Requirements for Child Care.

A. The gross floor area of the required child day care facility in office structures shall total no less

than one thousand two hundred sixty (1,260) square feet or one and four tenths (1.40) percent of the gross floor area of the structure exclusive of parking, loading and those exceptions listed under Sec. ~~914.11~~ 914.09, whichever is greater.

B. The gross floor area of the required child day care facility in any structure other than an office, residential or industrial structures shall total no less than one thousand two hundred sixty (1,260) square feet or 0.70 percent of the gross floor area of the structure exclusive of parking, loading and those exceptions listed under Sec. 920.01.A, whichever is greater.

C. In the case of a mixed-use development, the gross floor area of the required child day care facility shall total no less than the sum of the gross floor areas of the required child day care facilities for each component use of the development as calculated under this section.

D. Any net increase in the gross floor area of a structure, conditional use, unit group development or planned development through subsequent development action shall be matched by a corresponding increase in the gross floor area of the required child day care facility or facilities. Such increase shall be computed per Secs. 920.01.A and 920.02. The owner or agent for the subject structure shall certify that the requirement for a net increase in child day care facilities specified herein remains satisfied. Any net decrease in the gross floor area of a structure, conditional use, unit group development or planned development through subsequent development action may, at the owner's option, be matched by a corresponding decrease in the gross floor area of the required child day care facility or facilities. Such decrease shall not exceed the amount computed per Secs. 920.01.A and 920.02.

Section 43. The Pittsburgh Code, Title Nine, Zoning Code, Article VI, Development Standards, is hereby amended at Chapter 922 Development Review Procedures as follows:

§ 922.11. Planned Developments.

This section sets out the required review and approval procedures for Specially Planned (SP) Developments and Planned Unit Developments (PUDs).

A. Method of Adoption. SP or PUD zoning districts may be established only in accordance with the Zoning Map Amendment procedures of Section 922.05 and the review and approval procedures of this section, which shall be carried out concurrently with the Zoning Map Amendment process.

B. Preliminary Development Plan.

1. Application. A complete application for Preliminary Land Development Plan approval shall be submitted to the Zoning Administrator in a form established by the Zoning Administrator, along with a nonrefundable fee that has been established to defray the cost of processing development applications. No application shall be processed until the Zoning Administrator determines that the application is complete and the required fee has been paid. Application for SP or PUD rezoning shall be submitted at the time of application for a certificate of occupancy.

2. Hearing and Action by the Planning Commission. The Planning Commission shall hold a public hearing on the application for Preliminary Development Plan Approval concurrently with the public hearing on the rezoning application. After the public hearing, the Planning Commission shall recommend approval, approval with conditions, or denial of the application

and transmit an accurate written summary of the proceedings to the City Council.

3. Review Criteria. The Planning Commission shall recommend approval of the Preliminary Land Development Plan application only if it finds that the proposal meets all of the following criteria:

(a) That the proposed district shall create an efficient, functional and attractive urban area which incorporates a high level of amenities;

(b) That the proposed district shall protect and preserve the natural environment;

(c) That the proposed district shall create a favorable environmental, social and economic impact on the City;

(d) That the establishment, maintenance, location and operation of the proposed district shall not be detrimental to or endanger the public health, safety, morals, comfort or general welfare;

(e) That the proposed district shall not be injurious to the use and enjoyment of other property in the immediate vicinity for the purposes permitted, nor substantially diminish or impair property values within adjacent zoning districts;

(f) That the establishment of the proposed district shall not impede the normal and orderly development and improvement of property for uses permitted in the adjacent districts;

(g) That adequate utilities, access road, drainage and other necessary facilities have been or shall be provided;

(h) That adequate measures have been or shall be taken to provide ingress and egress designated so as to minimize traffic congestion in the public streets; ~~and~~

(i) The proposed development must adequately address pedestrian traffic generation, proposed pedestrian circulation facilities and patterns, including, but not limited to, provision for adequate sidewalk capacity on and off site and appropriate pedestrian safety on and off site;

(j) The proposed development must adequately address support and provide safe access to multi-modal transportation facilities; and

(k)That the proposed development complies with plans and policy documents adopted from time to time by the City.

4. Conditions of Approval. The Planning Commission may recommend approval with conditions if such conditions, when met, would have the effect of bringing the proposal into full compliance with the review criteria of Section 922.11.B.3.

5. Hearing and Action by City Council. The City Council shall hold a public hearing on the Zoning Map Amendment application. After the public hearing, the City Council shall act to approve, approve with conditions, approve in part, deny, or deny in part the application. The Zoning Map Amendment shall not become effective nor shall it be entered upon the Zoning District Map until the Planning Commission has approved a Final Land Development Plan and

an Improvement subdivision site plan has been duly recorded.

6. Amendments. The procedure for amending an approved Preliminary Land Development Plan shall be the same as required for a new Preliminary Land Development Plan under Section 922.11.B.2.

7. Notice. A public hearing shall be scheduled, and notice shall be required when ten (10) years or more have elapsed from the approval date of the most recently amended Preliminary Land Development Plan for an existing SP or PUD district. The Zoning Administrator shall give at least twenty-one (21) days public notice of the Planning Commission hearing by posting in accordance with the notice requirements of Section 922.01.C.2 and by mail in accordance with the notice requirements of Section 922.01.C.1 to all property owners within a one hundred fifty (150) foot radius of the subject property.

Section 44. The Pittsburgh Code, Title Nine, Zoning Code, Article VIII, Review and Enforcement, is hereby amended at Chapter 922 Development Review Procedures as follows:

922.15 - Mixed Use Development Standards

The following standards shall apply to the UC-MU, UC-E, and R-MU only.

922.15.A Parking

In addition to the Parking, Loading and Access requirements of Chapter 914, the following limitations on parking shall apply. In the case of conflict with other provisions of the Code, these provisions control

~~1. Required Parking~~

~~a. The minimum parking required in this District is fifty (50) percent of the minimum parking required in Schedule A of Section 914.02.A, unless otherwise provided.~~

~~b. The maximum parking limitation is the minimum parking required listed in Schedule A of Section 914.02.A.~~

~~c. Uses requiring parking demand analysis shall provide parking in accordance with Section 914.02.B without modification.~~

~~d. Reduction below to fifty (50) percent of the minimum parking required in Schedule A required parking minimums requires contributing to a mobility improvement trust.~~

~~2.~~ 1. Surface Parking

a. Surface parking is prohibited, except as accessory to single and two-unit residential when located at the rear of the property, or as exempted in 904.08.B.2. Tuck-in parking, located at the rear and underneath multi-unit residential structures shall not be considered surface parking.

~~3.~~ 2. Structured and Integral Parking

a. New structured and integral parking with six (6) or more spaces, whether a Primary or Accessory use, must have at least ten (10) percent of spaces EV Ready or twenty (20) percent of spaces EV Capable. Structured and integral parking accessory to Affordable Housing, housing with a gross

cost, including utilities, that does not exceed thirty (30) percent of the occupant's income, shall be exempt from this requirement. When the minimum number of EV spaces required results in a fractional number, a fraction of less than one-half (½) shall be rounded down to next lowest number and a fraction of one-half (½) or more shall be rounded to the next highest whole number. Prior to issuance of the Record of Zoning Approval, an electrical engineer or other qualified, licensed professional shall document that the building and/or electrical permit drawings approved by the Department of Permits, Licenses, and Inspections are in compliance with requirement.

b. On any Street frontage, ground level parking is prohibited except if lined with an active use. Active uses include residential, retail, office, lobbies, and bike facilities.

Section 45. The Pittsburgh Code, Title Nine, Zoning Code, Article VIII, Review and Enforcement, is hereby amended at Chapter 924 Enforcement and Penalties, as follows:

CHAPTER 924: ENFORCEMENT AND PENALTIES

924.01. Authority.

This Code shall be enforced by ~~the Chief of the Bureau of Building Inspection~~ Director of the Department of Permits, Licenses, and Inspections or Code Official or such other officer of the City as may from time to time be designated by the City Council or its designee.

924.02. Issuance of Permits.

No person in the employ of the City or acting on behalf of the City shall

(a) Issue any building permit, grant any Certificate of Occupancy or otherwise allow a building or use that would violate the provisions of this Code. Any permit issued upon a false statement of fact that is material to the issuance of such permit shall be void.

924.03. Types of Violations.

Any of the following shall be a violation of this Code and shall be subject to the enforcement remedies and penalties provided by this Code and by state law:

924.03.A Development or Use Without Permits

(a) To engage in any development, use, construction, remodeling or other activity of any nature that is subject to the provisions of this Code without all of the required permits, approvals, certificates and other forms of authorization required by this Code in order to conduct or engage in such activity;

(b) To engage in any Regulated Activity, as defined in this Code or in Chapter 1003 of Title Ten: Building or in Title Thirteen: Stormwater Management, as applicable, without all of the required permits, approvals, certificates and other forms of authorization required by such Codes in order to conduct or engage in such activity;

924.03.B Development or Use Inconsistent with Permit

To engage in any development, use, construction, remodeling, or other activity of any nature in any way inconsistent with the terms and conditions of any permit, approval, approved Stormwater Management Site Plan, Transportation Demand Management Plan, certificate or other form of authorization required in order to engage in such activity;

924.03.C Development or Use or Regulated Activity Inconsistent with Conditions

To violate, by act or omission, any term, condition, or qualification placed upon a required permit, approved Stormwater Management Site Plan, Transportation Demand Management Plan, certificate, or other form of authorization;

924.03.D Development or Use or Regulated Activity Inconsistent with Code

To erect, construct, reconstruct, remodel, alter, maintain, move, or use any building, structure or sign, or to use any land, or perform any Regulated Activity, in violation or contravention of any regulation of this Code or of Chapter 1003 of Title Ten: Building or of Title Thirteen: Stormwater Management;

924.03.E Making Lot or Setback Noncomplying

To reduce or diminish any lot area so that the setbacks or open spaces shall be smaller than prescribed by this Code;

924.03.F Increasing Intensity of Use

To increase the intensity of use of land or structure, except in accordance with the procedural and substantive requirements of this Code;

924.03.G Continuing Violation

To continue any of the above violations; and

924.03.H Removing, Defacing, Obscuring Notice

To remove, deface, obscure or otherwise interfere with any notice required by this Code.

924.04. Remedies.

The City shall have the following remedies and enforcement powers:

924.04.A Withhold Permits and Approvals.

The City may deny or withhold all permits, certificates, approvals or other forms of authorization, or for any SWM Site Plan or SWM BMPs, on any land or structure or improvements thereon upon which there is an uncorrected violation of a provision of this Code or of Chapter 1003 of Title Ten: Building or of Title Thirteen: Stormwater Management, or of a condition or qualification of a permit, certificate, approval or other authorization previously granted by the City, Planning Commission, or Code Official, or the applicable Zoning Board of Adjustment.

The City may, instead of withholding or denying an authorization, grant such authorization subject to the condition that the violation be corrected.

The provisions of this section shall apply regardless of whether the current owner or applicant is responsible for the violation in question.

The City may deny or withhold all permits, approvals, certificates or other forms of authorization or for any SWM Site Plan or SWM BMPs on any land or structure or improvements or Development owned by a person who owns, developed or otherwise caused an uncorrected violation of a provision of this Code or of Chapter 1003 of Title Ten: Building or of Title Thirteen Stormwater Management or of a condition or qualification of a permit, certificate, approval or other authorization previously granted by the City. This provision shall apply regardless of whether the property for which the permit or other approval is sought is the property in violation.

924.04.B Revoke Permits and Approvals

924.04.B.1 Permits for Construction

Any permit may be revoked when the Chief of the Bureau of Building Inspection determines that any of the following conditions exist:

(a) That there is departure from the plans, specifications, or conditions that apply to the permit;

(b) That the same was procured by false representation or was issued by mistake; or

(c) That any of the provisions of this chapter are being violated. Written notice of such revocation shall be served upon the owner, his or her agent, or contractor, or upon any person employed on the building or structure for which such permit was issued, or shall be posted in a prominent location; and, thereafter, no such construction shall proceed.

924.04.B.2 Permits for Occupancy

Any permit allowing legal occupancy of a structure or a lot, including the Certificate of Occupancy, may be revoked when the Chief of Building Inspection determines that any of the following conditions exist:

(a) That there has been a violation of the approved plan, specifications or conditions that apply to the permit, including violations resulting from changes to the structure or lot from the approved plan;

(b) There has been a violation of the approved plan or conditions that apply to the approved plan or permit which result from non-compliance with operational aspects of the structure or lot, which include but are not limited to hours of operation, violation of the noise, vibration or other environmental standards of this Code, or other management practices of the building or lot which are in clear violation of the approved plans.

924.04.B.3. Approval of SWM Site Plan and SWM BMPs

Any approval may be revoked when the Code Official determines that any of the following conditions exist:

(a) Non-compliance or failure to implement any provision of the approved SWM Site Plan or Operation and Maintenance Agreement; or

(b) That the same was procured by false representation or was issued by mistake; or

(c) A violation of any provision of Title Thirteen: Stormwater Management or any other applicable law, ordinance, rule, or regulation relating to the regulated activity; or

(d) The creation of any condition or the commission of any act during the regulated activity which constitutes or creates a hazard, nuisance, pollution, or endangers the life or property of others; or

(e) That any of the provisions of this chapter are being violated. Written notice of such revocation shall be served upon the owner, Developer, his or her agent, or contractor, or upon any person employed on the development or structure for which such approval was issued, or shall be posted in a prominent location; and, thereafter, no such construction shall proceed.

924.04.C Stop Work

With or without revoking permits, the City may stop work on any Development, Regulated Activity, building or structure on any land on which there is an uncorrected violation of a provision of this Code or of Chapter 1003 or of Title Thirteen: Stormwater Management or of a permit or approval or other form of authorization issued hereunder, in accordance with its power to stop work under the Building Title.

924.04.D Revoke Plan, SWM Site Plan Approval or Other Approvals

Where the violation involves a failure to comply with approved plans or conditions to which the approval of was made subject, the body with authority to approve the plans or applications may, upon notice to the applicant and after a hearing, revoke the plan or other approval, or condition the continuance of approval on such conditions as the City

Council may reasonably impose.

924.04.E Injunctive Relief

The City may seek an injunction or other equitable relief in court to stop any violation of this Code or of the Stormwater Management provisions of Title Ten: Building or of Title Thirteen: Stormwater Management.

924.04.F Abatement

The City may seek a court order in the nature of mandamus, abatement or other action or proceeding to abate or remove a violation or to otherwise restore the premises in question to the condition in which they existed prior to the violation.

924.04.G Penalties

Any person, firm, association, or corporation violating any provision of this Zoning Ordinance, approved Transportation Demand Management Plan, or of the Stormwater Management provisions of Chapter 1003 of Title Ten: Building or of Title Thirteen: Stormwater Management, shall upon conviction be fined not more than one thousand dollars ($1,000.00) for each offense and costs, and in default of payment of such fine and costs, shall be imprisoned in the county jail or workhouse for not more than thirty (30) days. Each day a violation is continued shall constitute a separate offense. In the case of firms or associations, the penalty may be imposed upon the partners or members thereof, and in the case of corporations, upon the officers thereof.

924.04.H Other Remedies

The City shall have such other remedies as are and as may be from time to time provided by Pennsylvania law for the violation of stormwater management plans or ordinances or zoning or related provisions of its Code.

924.04.I Remedies Cumulative These

remedies shall be cumulative.

924.05. Enforcement Procedures.

In enforcing this Code, the City shall follow the procedures set forth in this section.

924.05.A Notice

In the case of violations not involving continuing construction or development, or any emergency situation, the Chief of the Bureau of Building Inspection or the appropriate Code Official shall give written notice of the nature of the violation to the owner of the land and to any person who is a party to the agreement or an applicant for any relevant permit, certificate or approval, after which the person receiving such notice shall have thirty (30) days to correct the violation before further enforcement action.

924.05.B Immediate Enforcement

In the case of a violation involving either continuing construction or development or an emergency situation (as reasonably determined by the Chief of the Bureau of Building Inspection or the appropriate Code Official), the City may use the enforcement powers and remedies available to it under this chapter without prior notice. Simultaneously with beginning enforcement action, the Chief of the Bureau of Building Inspection or the appropriate Code Official shall send notice to the owner of the land and to any person who is a party to the agreement or an applicant for any relevant permit, certificate or approval.

Section 46. The Pittsburgh Code, Title Nine, Zoning Code, Article IX, Measurements and Definitions, is hereby amended at Chapter 925, Measurements, as follows:

925.06.G Features Allowed within Setbacks by Administrator's Exception

The Zoning Administrator shall be authorized, in accordance with the Administrator Exception procedures of Sec. 922.08, to permit features as per Sec. 925.06.G.1 within setbacks, according to the provisions of Sec. 925.06.G.2 below.

925.06.G.1 Permitted Features

The following features shall be permitted within setbacks in accordance with the standards of this section:

(a) Swimming pool and deck in rear and side yards;

(b) Garage, carport or parking stalls for residential uses with four (4) or more parking spaces and all other non-residential uses in rear and side yards;

(c) Storage shed or gazebo in rear and side yards;

(d) Decks and porches in the front, side or rear yard;

(e) Dumpsters;

(f) Building additions to primary structures, where the existing primary structure is built within a setback, except for the Riparian Buffer as per 905.04.E.4;

(g) Enclosures of existing decks and porches in side or rear yards;

(h) Rooftop decks on detached garages; ~~and~~

(i) Detached Accessory Dwelling Units in side or rear yards except Accessory Dwelling Units built above garages abutting a way; and

(j) Accessory Structures not listed above, where the primary structure is built within a setback.

925.06.G.2 Standards

The applicant shall establish, by submittal of a plot plan, photograph(s) and other pertinent data such as written approval by abutting property owners that:

(a) For features other than porches, and decks, with respect to the front and side yard setback requirements and detached Accessory Dwelling Units with respect to the side yard setback, the proposed construction or erection will not place the accessory use, structures, or additions any closer to the front or neighboring property line than the building line of the applicant's existing, legally established, primary structure;

(b) The establishment, maintenance, location and operation of the proposed use will not be detrimental to or endanger the public health, safety, morals, comfort or general welfare;

(c) Authorization of the proposed exception will not be injurious to the use and enjoyment of other property in the immediate vicinity for the purposes permitted, nor substantially diminish or impair property values within the neighborhood;

(d) The establishment of the proposed exception will not impede the normal and orderly

development and improvement of surrounding property for uses permitted in that district; and

(e) Any illumination or drainage shall be contained on site and directed away from abutting properties.

925.06.G.3 Administrator Action

Before approving an application, the Administrator shall recommend reasonable adjustments including, but not limited to, items concerning utilities, drainage, noise, landscaping and maintenance thereof, lighting, access, egress, screening of accessways to ensure that authorization of the proposed exception is consistent with the standards found in Sec. 925.06.G.2 above.

Section 47. Savings Clause. If any section or provision or parts hereof in this ordinance shall be adjudged invalid or